OWNERS HANDBOOK

FOR

OPERATION AND MAINTENANCE OF

BVH VANS RV-8A AIRPLANE

NOTICE

THIS HANDBOOK IS NOT DESIGNED, NOR CAN ANY HANDBOOK SERVE, AS A SUBSTITUTE FOR ADEQUATE AND COMPETENT FLIGHT INSTRUCTION, OR KNOWLEDGE OF THE CURRENT AIRWORTHINESS DIRECTIVES, THE APPLICABLE AIR REGULATIONS AND ADVISORY CIRCULARS. IT IS NOT INTENDED TO BE A GUIDE OF BASIC FLIGHT INSTRUCTION NOR A TRAINING MANUAL.

THE HANDBOOK IS DESIGNED TO:

1. HELP YOU OPERATE YOUR RV-8A WITH SAFETY AND CONFIDENCE.
2. MORE FULLY ACQUAINT YOU WITH THE BASIC PERFORMANCE AND HANDLING CHARACTERISTICS OF THE AIRPLANE.
3. MORE FULLY EXPLAIN YOUR RV-8A'S OPERATION THAN IS PERMISSIBLE TO SET FORTH IN THE AIRPLANE FLIGHT MANUAL

Published by

PUBLICATIONS DEPARTMENT

BVH Aerospace

Revised: 2014-07
Issued: 2014-10-04

The Vans RV-8A aircraft

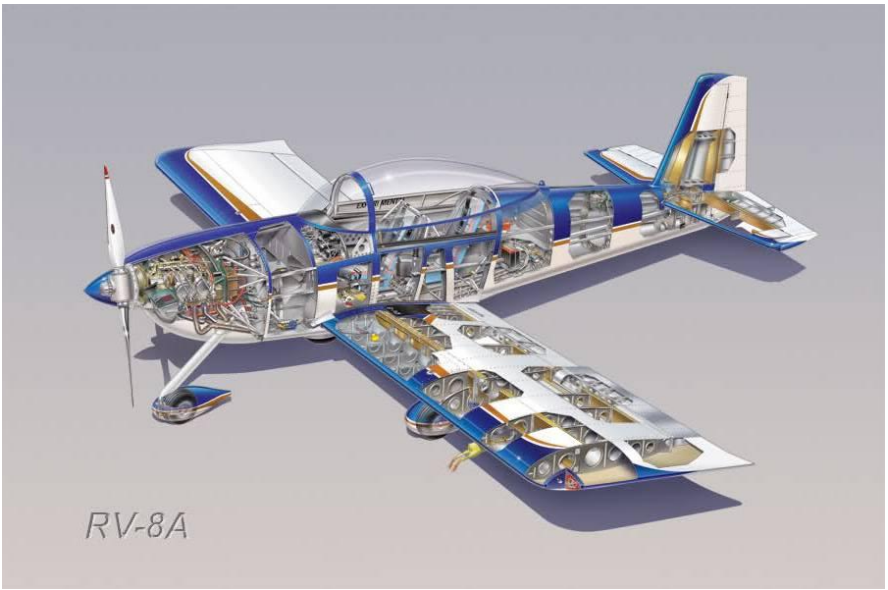

SECTION ONE

DESIGN FEATURES

I. Specifications

Manufacturer	BVH Aerospace
Manufacture date	2014
Model	Van's RV-8A
Serial	82612
Empty weight / gross weight	494/816 kg (1088/1800 lbs)
Payload (full fuel)	212 kg (468 lbs)
Useful load	323 kg (711 lbs)
Engine	Lycoming IO-360-M1B (180HP/134kW)
RPM max	2700
CHT max	260 °C (500 °F)
Oil capacity	8 lit 50 wt
Oil pressure range	4-6 bar (55-85 psi)
Oil temperature max	118 °C (245 °F)
Fuel pressure range	1-3 bar (14-44 psi)
Induction	Precision Silver Hawk EX360-1
Propeller	Sensenich 72FM85-S1 1.8 m (72")
Tires	5.00x5 (main), 4.00x5 (nose)
Airfoil	NACA 2300 Series
Wingspan	7.3 m (24 ft)
Wing area	10.8 m^2 (116 ft^2)
Wing loading	75.7 kg/m^2 (15.5 lbs/ft^2)
Power loading	4.5 kg/hp (10 lbs/hp)
Length	6.3 m (20 ft 10")
Height	2.2 m (87.5")
Wheelbase	1.9 x 1.5 m (76 x 61")
G limit @ 820 kg	+3.8 g
G limit @ 700 kg	+6.0 g
Fuel Capacity (Total)	160 lit
Fuel Capacity (Usable)	155 lit
Fuel Flow (@ 75%)	43 lit/hr
Fuel Flow (@ 55%)	35 lit/hr
Performance Solo	
Takeoff Distance	84 m (275 ft)
Landing Distance	107 m (350 ft)
Rate of Climb	2,200 fpm
Ceiling	22,000 ft
Performance Gross	
Takeoff Distance	175 m (575 ft)
Landing Distance	152 m (500 ft)
Rate of Climb	1,600 fpm
Ceiling	19,500 ft
Range (75% @ 8000 ft)	678 nm
Range (55% @ 8000 ft)	821 nm
Service Ceiling	19,500 ft
Baggage Capacity Fwd (max)	25 kg (55 lbs)
Baggage Capacity Aft (max)	35 kg (77 lbs)
Baggage Space Fwd	140 lit (4.9 ft^3)
Baggage Space Aft	212 lit (7.5 ft^3)

LIMITATIONS

Operating Speeds

VREF	Flight Regime (gross weight)	kts
Vs	Stall, flap retracted	56
Vso	Stall, flap extended	51
Vr	Takeoff rotate	65
Vref	Final approach (~1.3 Vso)	70
Vx	Best angle climb	72
Vy	Best rate climb	90
Vz	Best cruise climb	100
Vbg	Best glide angle	105
Vfe	Flaps extension	85
Va	Maneuvering	120
Vno	Max structural cruise	165
Vne	Never exceed	200

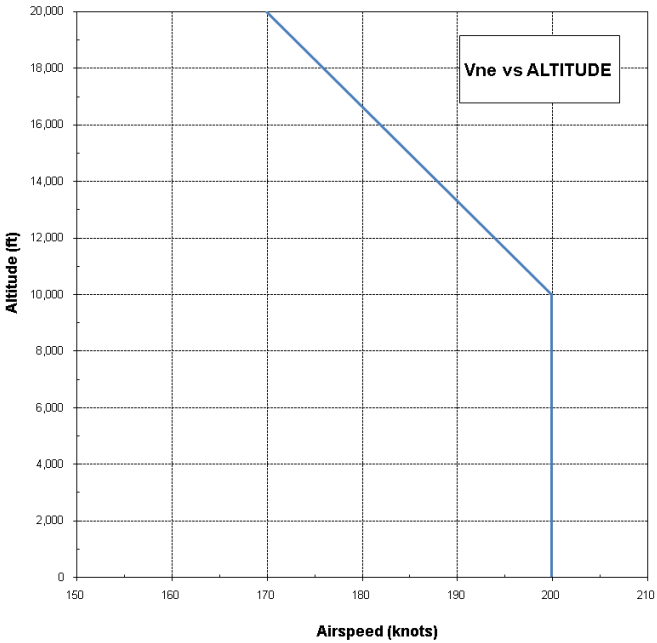

V_{NE} vs ALTITUDE

AIRSPEED INDICATOR MARKINGS

MARKING	ANALOG ASI (kts)	EFIS ASI (kts)	SIGNIFICANCE
White Arc	48–87	48–87	Full Flap Operating Range. Lower limit is maximum weight stall speed in landing configuration. Upper limit is maximum speed permissible with flaps fully extended.
Green Arc	50–168	50–170	Normal Operating Range. Lower limit is maximum weight stall speed with flaps retracted. Upper limit is the maximum structural cruising speed.
Yellow Arc	168–200	170–200	Operations must be conducted with caution and only in smooth air.
Red Line	200		Maximum speed for all operations.

NOTES:

1. The analog airspeed indicator markings are based on position error estimates provided by Van's Aircraft. These markings do not account for the analog ASI instrument error.
2. *The EFIS airspeed tape markings are to be revised to incorporate actual position errors once these have been determined.*

FUEL QUANTITY DATA (liters)

Tanks	Usable fuel	Unusable fuel	Total fuel
Left wing	*78*	*2*	*80*
Right wing	78	2	80

II. Engines and Propellers

The Lycoming IO-360-M1B engine in the RV-8A produces 180 HP (134 kW) at 2700 RPM. This engine has a compression ratio of 8.5:1 and use 91/96 or 100LL minimum octane fuel.

The engine on the standard RV-8A is equipped with a geared starter, alternator, two magnetos, shielded harness, shielded spark plugs, diaphragm fuel pump, tachometer pickups, and thermostats for oil, cylinder head and exhaust gas temperatures.

Engine mounts are of steel tubing construction and incorporate vibration absorbing load mounts. Engine cowls are largely interchangeable and are cantilever structures attached at the firewall. The nose section is split for quick removal. Cowls are quickly removable by means of piano hinge fasteners.

The exhaust system is a straight type with exhaust gases directed into muffled jet augmenter tubes located to the bottom side of the engine. This system provides for exhaust elimination without power loss and effective engine cooling through the pumping action of the exhaust gases into the augmenter tubes, which draws cooling air through the engine compartment; no cowl flaps or cooling flanges are needed on the cowling. Higher aircraft speeds are obtainable with this system due to reduced cooling drag and due to extra thrust furnished by the exhaust augmentation.

Efficient aluminum oil coolers are mounted on the rear of the engine. Engine oil drainage is accomplished with two quick oil drain valves located on the left and right front corners of the engine crankcase.

Engine air is directed through a quickly removable filter, located in the nose cowl, to the throttle body air box. Heated air for the throttle body is taken from shrouds on the exhaust manifolds through flexible tubes to the air boxes. (See Section II, Sub Section V for throttle body heat application).

The propeller on the RV-8A is a Sensenich O-360, 4" spacer, 1/2" bolt, 85" pitch Part Number = PROP 72FM8S16-1 (85).

III. Fuselage and Wing Structures

The RV-8A fuselage is a composition of three basic units: the sheet metal tail cone, cabin section and nose section. The stressed skin fuselage is intended to withstand the high loads imposed on the center section region of the airplane and provides an extra safety factor in this area.

The wing structure is lightweight but rugged and consists of a massive stepped-down main spar, a front and rear spar, lateral stringers, longitudinal ribs, stressed skin sheets and a readily detachable wing tip section. The rectangular plan form of the wing permits the use of many interchangeable parts and simplifies the construction while providing for excellent stability and performance characteristics.

The main wings use a 13.5% NACA 2300 series airfoil.

The primary bending loads of the wing are carried by the single main spar. Wing torsional and drag loads are carried by the wing skins and rear spar. The same is true of the tail surfaces. The fuselage skins, whose shape is maintained by formed aluminum bulkheads, provide torsional and bending strength. Aluminum angle longerons in the fuselage provide stiffening for the skin and greater strength at localized points of attachment.

IV. Landing Gear

All three landing gear units on the RV-8A incorporate the same soft acting tubular steel landing gear with the nose wheel mounting tube welded to the engine mount. The landing gear requires no maintenance.

Main wheels are 500x5 Cleveland Aircraft Products units with disc type brakes and 500x5 tires with a four ply rating. The nose wheel is a Cleveland 400x5 model fitted with a 400x5 tire with a four ply rating. All tires have tubes. (See Section IV, Sub Section II for tire service).

Main gear brakes are actuated by toe brake pedals on the front rudder pedals. Hydraulic brake cylinders located in front of the rudder pedals are readily accessible in the cockpit for servicing. (See Section IV, Sub Section IV for brake service).

The nose wheel is free castoring and the aircraft is steered with differential braking.

V. Hydraulic System

The hydraulic system is used for the individual actuation of the Cleveland calipers on the main wheels. The operation of these units is accomplished by applying pressure to the toe-brakes which is fitted to the rudder pedals.

A hydraulic brake fluid is supplied from reservoir is located on the firewall to the two master cylinders attached to the toe-brakes. The level of hydraulic fluid should be checked regularly.

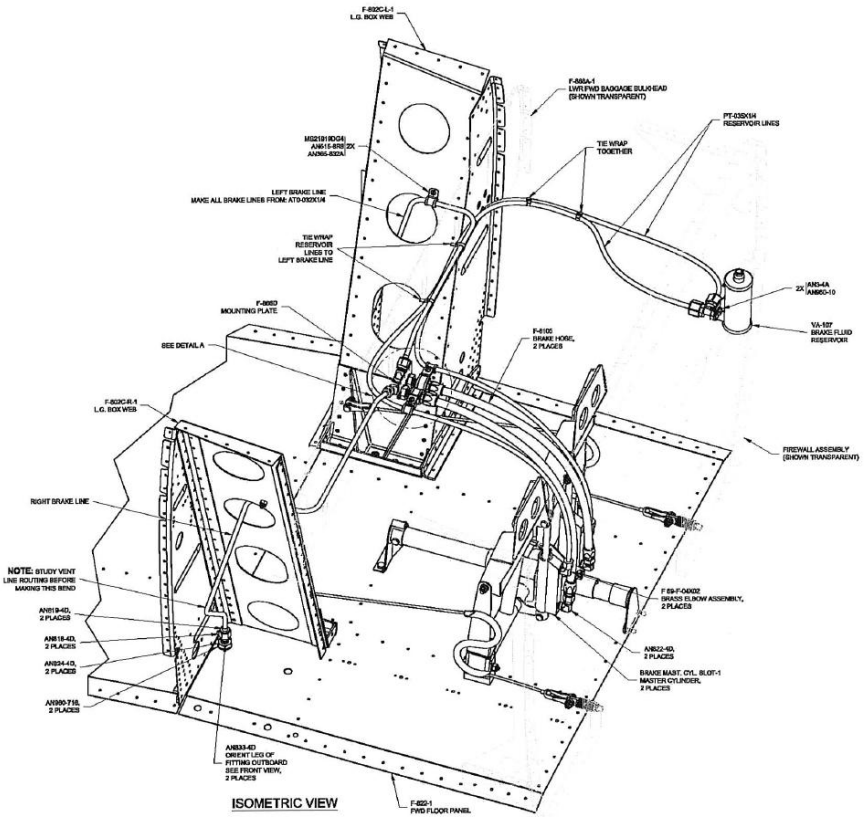

VI. Control System and Surfaces

Dual stick and rudder flight controls are provided in the RV-8A as standard equipment. All controls are light yet solid and effective in flight at all speeds down through the stalling speed. The front set of rudder pedals is equipped with toe brakes.

All control surfaces on the RV-8A are either pushrod or cable controlled and are conventional sheet metal structures, fitted with aluminum hinges and needle bearings. The flaps are actuated by an electric motor located in the left side of the cabin wall. Access to this motor is obtained by the removal of the interior panel.

The ailerons and elevator are connected by push rods with the joysticks. The rudder is connected by cables to the rudder pedals. The aileron is provided with a trim system which is actuated by a lever located on the left console.

The horizontal tail is a stabilizer and elevator with an anti-servo tab which also acts as longitudinal trim tab, actuated by rocker switch on the left console. The trim functions are also available on the joystick. The stabilizer provides excellent stability and controllability throughout the entire speed envelope of the aircraft.

VII. Fuel System

Two eighty liter fuel tanks located inboard in the wings provide fuel storage in the RV-8A. The tanks should be kept full of fuel during storage of the airplane to prevent accumulation of moisture and to prevent deterioration of the seals. For long term storage without fuel, the seals should be coated with light engine oil to keep from drying out.

The fuel system in the RV-8A is simple, but completely effective. Fuel can be pumped from either tank to the engine through use of the engine driven and/or electric fuel pumps.

For normal operation, fuel is pumped by the engine driven pump from the tanks directly to the throttle body. The fuel valve can be left on at all times.

An electric auxiliary fuel pump, located on the left side of the fuselage floor directly behind the engine compartment firewall, is installed in by-pass fuel lines between the tanks and the engine driven pump. The electric pump can be used to provide pressure in the event of failure of the engine pump. It are normally turned on to check their operation before starting the engines, turned off after starting, to check engine driven pump and left on during take-off and landing, to preclude the possibility of fuel pressure loss due to pump failure at critical times.

If engine driven pump fails, the electric pump to that engine can be turned on to supply the fuel.

A replaceable fuel filter is installed between the fuel selector valve and the auxiliary fuel pump. The fuel filter is mounted on the left side of the fuselage below the console.

Fuel selector and boost pump arrangement

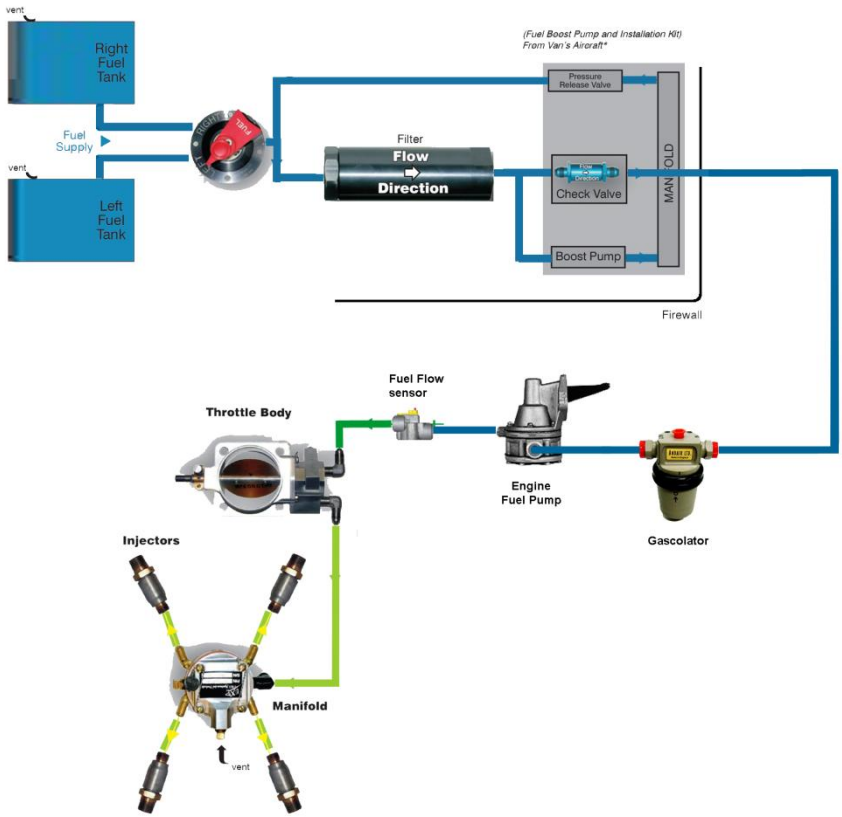

Fuel can thus be used from one tank or the other, by switching the main valve control to the desired tank. For all normal operation, it is recommended that the electric fuel pump be switched on during tank changeover.

The fuel valve control is located below the left instrument console. Two electric fuel gauges directly in front of the fuel valve control indicate the fuel quantity in each tank.

> ***CAUTION*** *- The electric fuel gauges indicate the last remaining 15 USG (57 lit) fuel quantity in each tank by means of individual float type resistive fuel sender units in the wing fuel tanks.*

The electric fuel pump switch is located on the left instrument console in front of the throttle.

A fuel strainer is located on the left bottom side of the firewall. It is fitted with a quick drain and should be drained regularly through the access ports. In order to check the fuel system for possible moisture content, the quick drain valve on the fuel strainer should be opened and drained. This procedure should be conducted prior to every flight. Fuel screens are provided at the tank outlets, in the throttle body and in the fuel pumps.

Idle cut-offs are incorporated in the throttle body and should always be used to stop the engines. This is accomplished by pulling the mixture control levels to the rearmost position.

VIII. Electrical System

The master switch for the electrical system is located on the lower right side of the control panel, along with the magneto and starting switch. Other electrical switches and circuit breakers are grouped on the lower right side console below of the instrument panel.

The starter switch is incorporated into the ACS switch located immediately above the master switch on the extreme right side of the instrument panel. This switch is spring loaded and is used to select the magneto OFF, LEFT, RIGHT, BOTH and also engage the starter motor in the START position. To operate, turn the ignition key to the right (START). After starting, release the key and it will return to the BOTH position.

Automatic circuit breakers are provided for all electrical circuits. These units automatically break the electrical circuit if an overload is applied to the system, preventing damage to the wires. To reset the circuit breakers, simply push in the buttons. Continual popping out of a circuit button indicates trouble in the electrical system and should be investigated.

An Odyssey PC625 12V, 18 AH primary battery, is mounted in the tail section behind the baggage compartment. An Odyssey PC310 12V, 8 AH auxiliary battery, enclosed in battery box, is mounted in the nose section on the right side. (See Section IV, Sub Section III for maintenance.) A 12 Volt 50 Ampere alternator is installed as standard equipment.

The EFIS backlight and panel lights are operated by a rheostat switch located on the left side of the instrument panel. The position lights are turned on with the first movement of the knob; panel light intensity is increased by further rotation of the control. Also, as optional equipment, individual instrument lights mounted on the instrument cover panel are turned on by the same rheostat, but panel light intensity is controlled by a separate rheostat.

The Alternator switch is mechanically linked with the split master switch located on the lower right side of the instrument panel. A voltage regulator is included into the alternator itself. The alternator provides charging current for both batteries.

As standard equipment an external power receptacle is available on the left tail section.

> ***CAUTION*** *- When connecting to an external power source, airplane master switch must be in the OFF position.*

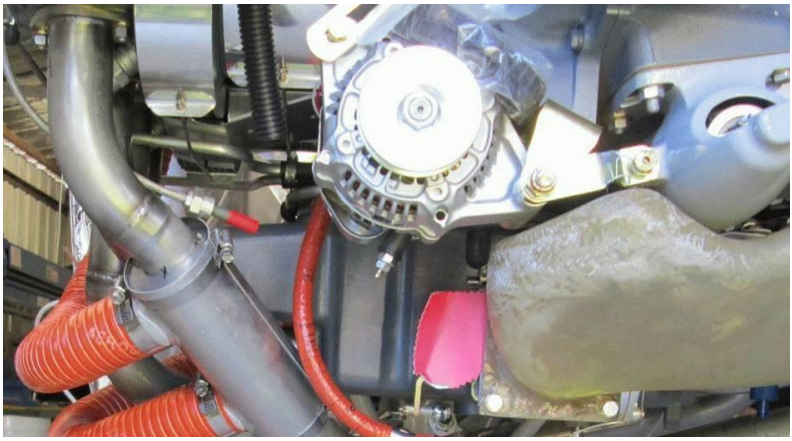

ELECTIRCAL SYSTEM

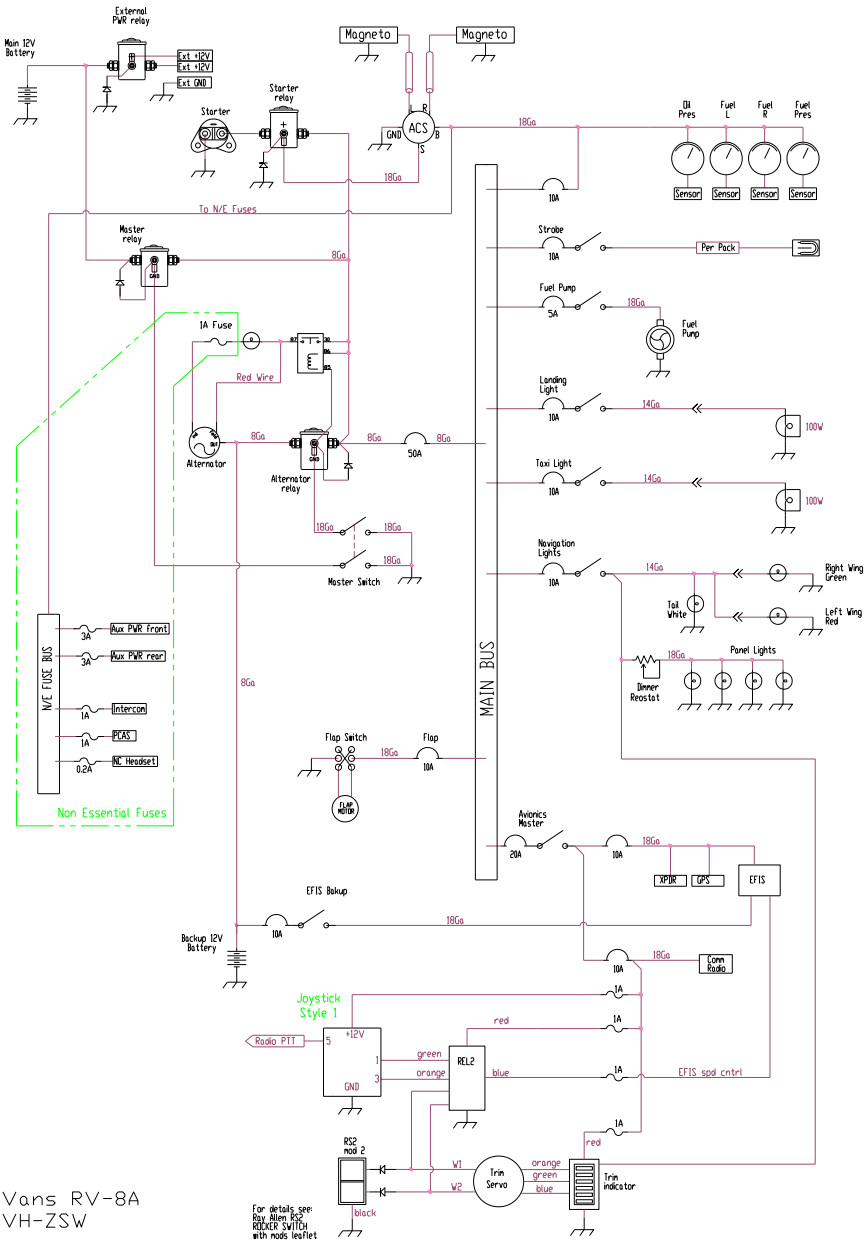

ELECTRICAL LOAD ANALYSIS RV-8A - 12 VOLT

A. MAXIMUM PROBABLE CONTINUOUS LOAD - (less radio equipment):

ITEM	NUMBER USED BVH RV-8A	TOTAL CURRENT IN AMPERES 12.0 Volts	TOTAL CURRENT IN AMPERES 14.3 Volts
Flap Gauge	1		
Fuel Contents Gauge	2		
Fuel Pressure Gauge	1		
Oil Pressure Gauge	1		
Garmin G3X EFIS	1		
Trim Gauge	1		
Alternator Contactor	1	.6	.7
Master Contactor	1	.6	.7
Navigation Lights	3		
Landing Lights	1	4.6	5.5
Instrument Flood Lights	2		
Strobe (Whelen)	1	5.0	5.9

B. INTERMITTENT LOADS

- Landing Lights
- Fuel Pump
- Starter Solenoids
- Cigar Lighters

PRIMARY EFIS FLIGHT INSTRUMENTS

1. *Heading Strip*
2. *Ground Speed (GS)*
3. *Airspeed Indicator*
4. *Attitude Indicator*
5. *Pathways*
6. *Flight Path Marker*
7. *Angle of Attack (AOA)*
8. *Pitch Scale*
9. *Vspeed Reference*
10. *Slip/Skid Indicator*
11. *True Airspeed (TAS)*
12. *Lateral Deviation Scale & Course Deviation*
13. *Selected Heading*
14. *Current Track Indicator*
15. *Wind Data (Speed & Direction)*
16. *Course Deviation Indicator (CDI)*
17. *Trim Indicator*
18. *Flap Indicator*
19. *Navigation Source*
20. *Bearing 1 Information Window*
21. *Outside Air Temperature (OAT)*
22. *Transponder Code*
23. *Transponder Mode*
24. *System Time*
25. *Bearing 2 Information Window*
26. *Bearing Pointer*
27. *Selected Heading Bug (HSI)*
28. *Selected Course*
29. *Altimeter Barometric Setting*
30. *Current Vertical Speed*
31. *Aircraft Symbol*
32. *Flight Director*
33. *Glideslope Indicator*
34. *Current Vertical Speed*
35. *Vertical Speed Indicator (VSI)*
36. *Reference Altitude*
37. *Selected Altitude Bug*
38. *Turn Rate Indicator*
39. *Zero Pitch Line*
40. *Current Track Indicator (Heading Strip)*
41. *Current Heading*
42. *Selected Heading Bug*
43. *Turn Rate Indicator*
44. *Autopilot Status Box*

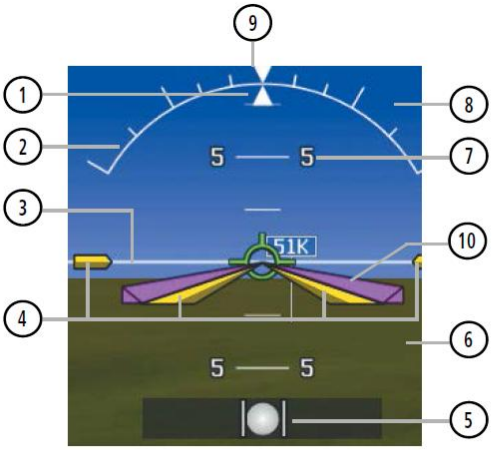

1. *Roll Pointer*
2. *Roll Scale*
3. *Horizon Line*
4. *Aircraft Symbol*
5. *Slip/Skid Indicator*
6. *Land Representation*
7. *Pitch Scale*
8. *Sky Representation*
9. *Roll Scale Zero*
10. *Flight Director Command Bars*

Attitude Indicator W/AFCS and SVX

1. *Lubber Line*
2. *Current Track Indicator*
3. *Course Pointer*
4. *Navigation Source*
5. *Course Deviation Indicator (CDI)*
6. *Rotating Compass Rose*
7. *To/From Indicator*
8. *Aircraft Symbol*
9. *Lateral Deviation Scales*
10. *Selected Heading Bug*
11. *Course Deviation & To/From Indicator*

Horizontal Situation Indicator (HSI)

IX. Finish

All aluminum sheet components of the RV-8A are carefully finished inside and outside to assure maximum service life. Both sides of all pieces are Alodine treated and/or sprayed with zinc chromate primer. External surfaces are coated with durable synthetic enamels in attractive high gloss colors.

X. Instrument Panel

The instrument panel of the RV-8A has been designed to accommodate all of the customary conventional flight instruments in front of the pilot. All required engine instruments are available on the EFIS and an additional tachometer is provided as part of the analog cluster. The flight instrument group is in an easily visible sub-panel. All instruments are accessible for maintenance by removing the instrument panel.

The Electronic Flight Information System (EFIS) in the flight group is provided with a fully redundant power system via the auxiliary battery. This will allow the EFIS system to remain operational in the event of a main battery failure. A switch for EFIS backup power from the auxiliary battery is included in the switch grouping on the right console.

A Hobbs meter is provided to eliminate the need for constant reference to aircraft and engine log books. Two small instrument clusters, below the instrument panel, include fuel quantity gauges on the left, oil and fuel pressure on the right. This information is also available on the multifunction display of the EFIS.

Radio units are installed in the center of the main panel. Radio circuit breakers are mounted in the circuit breaker panel on the right side of the fuselage.

XI. Seats

The RV-8A has two fixed seats provided with impact absorbing high density foam cushions. The seats are constructed of aluminium extrusions and formed sheeting. The seats are easily removable by extracting the piano hinge securing the seats to the floor.

The distance from the front seat to the rudder pedals can be adjusted by moving the rudder pedal assembly fore and aft.

Both front and rear seats are fitted with full five point harness restraints suitable for acrobatic flight.

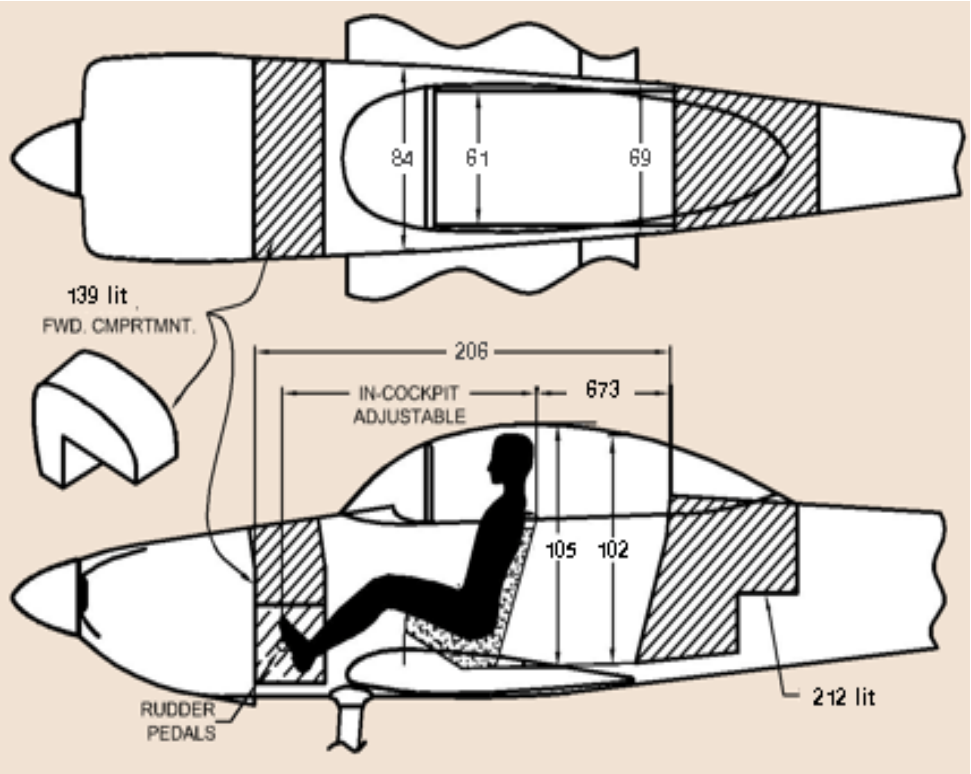

Arm rests for both seats, headset jacks, auxiliary power points and storage compartments are all standard on the RV-8A. The sliding canopy and baggage doors are equipped with locks operated by the same key. A tow bar is provided with each airplane and, when not in use, is stowed in the baggage compartment.

XII. Radio Equipment

In the standard model of the RV-8A, provisions for radio installations include dual microphone and headset jacks, a microphone and headset mounting bracket, wiring to these units and panel space for at least two radio sets. Radios, in different combinations, are available and are specifically chosen to provide in the RV-8A all of the most recent radio developments normally desired in this type of aircraft.

XIII. Ventilation

The flow of air for cooling the RV-8A cabin may be controlled by the ball valve on instrument panel. Air is exhausted through an outlet on the rear of the cabin.

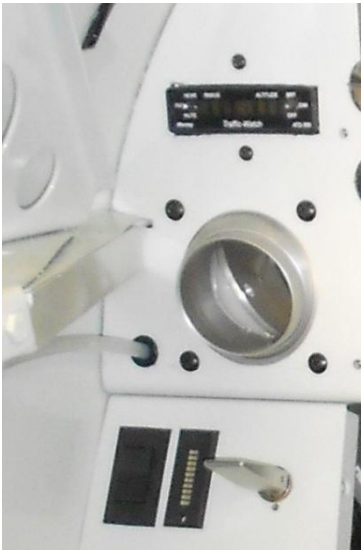

SECTION TWO

OPERATING INSTRUCTIONS

I. Preflight

Be sure that you have been thoroughly checked out before operating this aircraft.

The following safety procedure instructions must become an integral part of the pilot's operational routine and/or preflight inspection.

Before each flight, visually inspect the airplane and/or determine that:

(1) The tires are satisfactorily inflated and not excessively worn.

(2) The landing gear pants are free of debris and do not interfere with the wheels.

(3) The propeller is free of detrimental nicks.

(4) The ground area under propeller is free of loose stones, cinders, etc.

(5) The cowling and inspection opening covers are secure.

(6) There is no external damage or operational interference to the control surfaces, wings or fuselage.

(7) The windshield is clean and free of defects.

(8) There is no snow, ice or frost on the wings or control surfaces.

(9) The tow-bar and control locks are detached and properly stowed.

(10) The fuel tanks are full or are at a safe level of proper fuel.

(11) The fuel tank caps are tight.

(12) The fuel system vents are open.

(13) The fuel strainers and fuel lines are free of water and sediment by draining once a day.

(14) The fuel tanks and throttle body is free of water and sediment by draining sumps once a week.

(15) There are no obvious fuel or oil leaks.

(16) The engine oil is at proper level.

(17) The brakes are working properly.

(18) The radio equipment is in order.

(19) The weather is satisfactory for the type of flying you expect to do

(20) All required papers are in order and in the airplane.

(21) Upon entering the plane, ascertain that all controls operate normally, that the flaps and other controls are in proper positions and that the canopy is locked

II. Starting

Before starting the engine, the pilot should set the parking brake and turn on the master switch and the electric fuel pump. When the engine is cold, (under 5 °C) prime the engine by advancing the mixture control to RICH until fuel flow is indicated then pull back to idle cut-off.

After making sure that the propeller is clear, turn the magnetos on and engage the starter. As the engine fires, advance the mixture control.

If the above procedure does not start the engine, re-prime and repeat the process. Continue to load cylinders by priming or unload by turning the engine over with the throttle open. If the engine still doesn't start, check for malfunctioning of ignition or fuel system.

If the engine is hot, the priming steps should be omitted. The fuel pump should remain OFF and the mixture control should remain in idle cut-off until the engine fires.

If the engine is flooded, the master switch and the magneto switches should be ON, the electric fuel pump OFF, the throttle fully open and the mixture control in idle cut-off. When the starter is engaged and the engine fires, the throttle control should be retarded and the mixture control advanced.

Starter manufacturers recommend that cranking periods be limited to thirty seconds with a two minute rest between cranking periods. Longer cranking periods will shorten the life of the starter.

III. Warm-Up and Ground Check

As soon as the engine starts, the oil pressure should be checked. If no pressure is indicated within thirty seconds, stop the engine and determine the trouble. (If a very cold temperature exists (-12 °C or below) a little longer period of time may be necessary).

Warm-up the engines at 1000 to 1400 RPM for not more than two minutes in warm weather, four minutes in cold weather. Avoid prolonged idling at low RPM as this practice may result in fouled spark plugs. If electrical power is needed from the alternator, the engines can be warmed at 2000 RPM at which point the alternator is putting out full charge. The magnetos should be checked at 2000 RPM with 15" Hg. MP and the propeller in flat pitch, the drop not to exceed 125 RPM. The engines are warm enough for take-off when the throttles can be opened without engine faltering.

The electric fuel pumps should be turned off after starting or during warm-up to make sure that the engine driven pumps are operating. Prior to take-off the electric pumps should be turned on again to prevent loss of power during take-off due to fuel pump failure.

IV. Take-Offs Climbs and Stalls

Just before take-off the following should be checked:

(1) Seat belts fastened

(2) Rudder pedals locked in position

(3) Controls Free

(4) Fuel ON

(5) Trim SET

(6) Alternate Air OFF

(7) Mixture Rich

(8) Electric Fuel Pumps ON

(9) Flaps Retracted

(10) Autopilot OFF

(11) Canopy Locked

(12) Propeller SET

(13) Engine Gauges Normal

(14) Strobe ON

A Normal takeoff is performed with flaps retracted. A Short field takeoff is performed with one-third flap, which is set by deflecting the ailerons fully and extending the flaps so that the flap angle matches the angle of the down aileron (12 degrees).

After the take-off has proceeded to the point where a landing can no longer be made wheels-down in event of power failure, the flap, if used, can be retracted. The throttle should be brought back to climbing power, 24" MP and the RPM reduced to 2400. The best rate of climb is obtained at 90 kts, but to give a high forward speed as well as a good rate of climb, a cruising climb speed of 100 kts is recommended. All controls are effective at speeds down through the stalling speed and stalls are gentle and easily controlled.

STALL SPEED TABLE

Configuration	**Power Off**
Flaps Retracted	56 kts
Flaps Down	51 kts

These figures are at gross weight (816 kg) in knots (kts).

V. Cruising

The cruising speed of the RV-8A is determined by many factors including power setting, altitude, temperature, load and equipment installed on the airplane.

The normal recommended economy cruising power setting of the RV-8A is at 65% power. At 10,000 feet this gives a True Air Speed of 155 kts. This power setting is obtained under standard conditions at 2400 RPM and 20" MP. Fuel consumption is about 40 liters per hour.

The optimum cruising speed of the RV-8A at 7000 ft is 175 kts. (See Power and Performance charts for power settings and performance under various conditions.)

The Lycoming engine on the RV-8A can be cruised at any percent of power from 75% down. 2400 RPM is recommended for maximum cruise performance and lower RPM's, down to 1800, for more economical cruising conditions. Ordinarily an RPM setting should be selected which will give maximum smoothness. To avoid undesirable stresses on the propeller and the possibility of detonation in the engine, no Manifold Pressure settings over 25" should be used with an RPM of less than 2000.

Use of the mixture control in cruising flight reduces fuel consumption at least 10% according to altitude. The fuel consumption data in this manual is for cruising with the mixture leaned.

There is no problem in overheating the engine cylinders on the RV-8A by excessive leaning, provided leaning is done only at cruise power (75% or less) or at higher power settings above 5000 ft.

Detailed cylinder head temperature information is provided by the EFIS. The engines run very rich at the full rich mixture position and leaning is essential to achieve satisfactory economy of operation.

To lean, pull back the mixture control to the farthest aft point at which a rapid forward movement of the control does not produce a momentary surge in RPM, indicating that the mixture has been too lean for maximum power. To get optimum leaning, the control must be within 3 mm forward of this point, which may be established by using a thumbnail as a temporary marker, or adding a pencil reference line on the quadrant placard.

VI. Approach and Landing

During the approach, the first stage of flap (10°) can be lowered at speeds under 87 kts, preferably on the downwind leg. Flaps should be lowered in final approach at an airspeed under 85 kts and the airplane trimmed to a gliding speed of 70 kts. Normally about 12" MP should be maintained to give a reasonable approach angle. For aircraft with a constant speed propeller, RPM should be left at high cruising RPM or approximately 2400. This propeller setting gives ample power for an emergency go-around and will prevent over-speeding of the engines if the throttle is advanced sharply.

The mixture control should be kept in full rich position to insure maximum acceleration if it should be necessary to open throttle again.

The amount of flap used during landings and the speed of the airplane at contact should be varied according to the wind, the landing surface and other factors. It is always best to contact the ground at the minimum practicable speed consistent with landing conditions.

Normally, the best technique for short and slow landings is to use full flap and a small amount of power, holding the nose up as long as possible before and after ground contact. In high wind conditions, particularly in strong crosswinds, it may be desirable to approach the ground at higher than normal speeds, with half or no flaps.

Landing Check List:

(1) Mixture rich.

(2) Propeller at high cruising RPM.

(3) Electric fuel pump on.

(4) Fuel on proper tank.

(5) Flaps full down or as desired (under 85 kts).

If it is necessary to "go around" apply full power and retract the flaps.

VII. Stopping the Engine

After the landing roll, the flaps should be retracted and the electric fuel pump switched off. After parking, the radios should also be turned off and the engine stopped by pulling the mixture control aft to idle cut-off. The throttle should be left full aft to avoid engine vibration while stopping. Then the ignition and all master switches must be turned off and the aircraft secured with chocks.

VIII. Emergency Procedures

1. ENGINE FAILURE

An engine failure on the RV-8A during flight will require an emergency landing to be performed. Trim the aircraft for the best glide speed of 105 kts. Locate a suitable landing area within the gliding range and establish an approach.

If altitude permits, an engine re-start should be attempted. If the engine does not start, close the throttle and set the mixture to cutoff. Switch off the fuel pump, close the fuel valve and continue with the emergency landing. Care should be taken to maintain the best gliding speed by using the elevator and control the descent by maneuvering and using the flaps.

2. BRAKE FAILURE

Main gear differential braking is the primary means of directional control below 15 kts, landing with one brake out poses a special kind of problem. If possible, select a runway with a crosswind coming from the side of the failed brake. The aircraft will weather vane into the crosswind and by careful application of the remaining good downwind brake, adequate directional control can be maintained. If it is inevitable that the aircraft will exit the runway surface and enter rough terrain or strike an obstacle, a ground loop performed using the remaining brake may be the better option and should be considered.

3. ALTERNATOR FAILURE

The alternator indicator warning light will illuminate indicating that the alternator is producing insufficient energy to run accessories and/or charge the battery. Also the Low Volt warning will be issued when main bus voltage drops below 13V.

Cycle the alternator field switch to see if the alternator will come back online. Pull and reset the 70A alternator B lead circuit breaker. If alternator output is not able to be restored, the remaining battery power will need to be rationed for the remainder of the flight.

Switch OFF the alternator relay to shed all alternator loads and isolate the auxiliary battery. All non-essential equipment should be switched OFF to conserve power.

If needed, switch ON the EFIS backup to provide the EFIS with backup power from the auxiliary battery.

> ***NOTE*** *- The transponder cycle time can be as long as 5 minutes and the EFIS startup pages each need to be acknowledged (using ENT key) following restoration of radio power.*

4. EMERGENCY LANDINGS

The RV-8A is equipped with an anti-splat nose leg and lip skid designed to take emergency landings without extensive damage to the structure of the airplane.

5. EMERGENCY DESCENT

If an immediate, rapid descent is required from altitude, roll the airplane into 45 degrees of bank or more (60-70 degrees desired) and apply 2-3 G's while simultaneously reducing the power to idle. Maintain a maximum of maneuvering speed (120 kts) during the spiral descent. The propeller will provide some drag at idle power. Operating at or near C_{LMAX} will increase induced drag and assist with increasing descent rate and controlling airspeed. If practical, slow below 85 kts, lower full flaps and maintain 2 to 2.5 g maximum, or buffet onset, whichever occurs first.

6. IN-FLIGHT CANOPY CLOSING PROCEDURE

In the event the sliding canopy is inadvertently unlocked in flight or should the handle not be pushed forward to its full locked position before take-off and becomes dislodged from its latching mechanism, the following procedure has been determined to be practicable for closing the cabin door while in flight, assuming adequate altitude has been attained.

1. Retard throttle
2. Reduce airspeed to 90 kts or less
3. Open air vent (left of pilot)
4. Close canopy
5. Recover power and airspeed

Other conditions, take-off, landing approach and general low altitude flight, will require action at the discretion of the pilot.

IX. Ground Handling and Mooring

The RV-8A should be moved on the ground with the aid of the nose wheel steering bar provided with each plane and installed in the baggage compartment.

Tie down ropes for mooring the airplane can be fastened to the wing tie down rings and at the tail skid.

The aileron and elevator controls should be secured by means of a safety belt or control locks to prevent control surface damage. The rudder is held in position by its connections with the rudder pedals and does not need to be secured except under unusually high wind conditions.

X. Weight and Balance

For weight and balance data, see the Weight and Balance Form, which gives the exact weight of the airplane and permissible center of gravity conditions.

XI. Operation Tips

In the operation of the RV-8A, as in that of any other type of aircraft, there are a few points of technique and information that apply particularly to this model. The following Operating Tips may be helpful in the operation of the RV-8A:

(1) Learn to trim the airplane for take-off so that only a very light back pressure on the wheel is required to lift the ship off the ground.

(2) The best speed for take-off is at about 65 kts under normal conditions. Trying to pull the airplane off the ground at too low an airspeed decreases the controllability of the airplane in event of engine failure.

(3) The flaps may be lowered at airspeeds up to 85 kts. To reduce flap operating loads, however, it is desirable to have the airplane at a slower speed before extending the flaps.

(4) Before attempting to reset any circuit breaker, allow a two to five minute cooling off period.

(5) Before starting the engine ascertain that all radio switches, light switches and the pitot heat switch are in the off position so as not to create an overloaded condition when the starter is engaged.

(6) The trim tab on the RV-8A is very responsive and a small adjustment in trim control gives a rapid trim change attitude.

(7) The Lycoming Engine on the RV-8A run very rich at the full rich position of the mixture control and must be leaned under all cruise conditions to achieve satisfactory economy.

(8) Flight when outside air temperatures are between -7 °C and 21 °C can cause the air intake to become obstructed with ice, leading to loss of engine power. In most cases when an engine loses manifold pressure without apparent cause, the use of alternate air will correct the condition.

NOTE *- Alternate air cannot be fully reset using the cockpit control and should be manually checked and reset after use by closing the alternate air flap inside the engine cowl after landing.*

XII. Radio Operation

Communication and Transponder equipment controls are located in the center of the instrument panel. Associated auxiliary switches are located on a separate panel on the right side console. Circuit breakers are located on the same panel as the other circuit breakers.

All sets may be turned ON by the switch located on the control head of each particular unit, with the exception of the EFIS which has its switch located on the right hand console panel.

After power is supplied, the pilot may wish to operate the transmitter by moving the transmitter selector switch to the proper position. The switch is located on the selector switch panel.

A Flightcom Model 403mc intercom provides audio cockpit communication to both occupants. The intercom is a monaural unit compatible with most aviation headsets and provides two station radio transmit capability.

A ATD-300 Traffic Watch TCAS unit is located on the left side of the panel, thus providing traffic collision avoidance.

XIII. Fuel Injection

The Precision Silver Hawk EX360-1 fuel injection system is based on the principle of measuring engine air consumption by use of a venturi tube and using airflow to control fuel flow to the engine. Fuel distribution to the cylinders is accomplished by a fuel flow divider.

Fuel pressure regulation by means of the servo valve causes a minimal drop in fuel pressure throughout the metering system. Metering pressure is maintained above vapor forming conditions while fuel inlet pressure is low enough to allow the use of a diaphragm pump. Vapor lock and associated problems of difficult starting are thus eliminated.

Incorporated in the servo regulator is the airflow sensing system which contains a throttle valve and venturi. The differential pressure between the entrance and the throat of the venturi is the measurement of air entering the engine. These pressures are applied across an air diaphragm in the regulator.

Mounted on top of the engine is the ported fuel flow divider with four nozzles routed to the cylinders. The divider contains a spring loaded positive shutoff valve. Within each cylinder are continuous flow air bleed nozzles with provisions to eliminate the adverse effects of low manifold pressure when idling. Since fuel metering is provided by the servo regulator rather than the nozzles, more uniform cylinder head temperatures result and a longer engine life is possible.

Induction air for the engine enters the opening in the nose cowl and is picked up by a large air duct at the right rear baffle. The air is directed to a filter and on to the servo regulator. An alternate air source for the induction system contains a door directly below the air filter. This door operates manually by the push-pull control to the right and in front of the throttle quadrant. The primary system should always be used for takeoff.

XIV. Low Power Low RPM Cruise

The high price of aviation fuel is causing aircraft owners and pilots to review their operations in search of ways to keep operating costs down. Those operating aircraft with controllable propellers have been requesting information on cruise operation in the low RPM range - 1800 or 1900 RPM for example. The number of queries received indicates great deal of interest and therefore it seems appropriate to share the information on this subject with all of our readers.

The Textron Lycoming Engine Operator's Manual has performance curves applicable to each engine series. The curve for the IO-360-M1B series, 180 horsepower engine imprinted here as a reference for this article. The curve does provide data on the maximum manifold pressure (MP), which may be used with any particular RPM at sea level and at altitude. The limiting manifold pressure line clearly restricts high manifold pressures with low RPM settings. There is a good reason for this; high manifold pressure and low RPM is similar to allowing your automobile to lug uphill in fourth gear. The pinging you hear in your automobile tells you that detonation is occurring and you should shift down to a lower gear. In an aircraft, detonation is not likely to be heard as damage occurs in the engine and it is then too late for preventive measures. For this reason, engine operation should be within the limitations established in the Pilot's Operating Handbook (POH).

XV. Flight Operations

Operation	RPM	HP	Speed (kts)	Fuel Burn (lit/hr)
Normal rated	2700	180		47
Performance cruise / 75% pwr	2450	135	175	43
Economy cruise / 65% pwr	2350	117	155	33
Cruise @ 55% power		99		29
Approach flaps up	72			
Approach flaps down	65			

STALLS

Stall characteristics of the RVs are straightforward and predictable. They occur with relatively little pre-stall buffet warning, but at an obviously high angle of attack and slow speed. The break is gentle and control may be regained instantly with normal recovery procedures, often by simply relaxing back-pressure on the stick. The usual altitude loss is 25-50 ft and can be held to zero by a quick application of power. There is little tendency to drop a wing unless provoked with a skid or slip.

SPINS

Spin resistance of the RV-8A is very good. Very definite pro-spin control inputs are necessary to provoke spin entry. Usually spin recovery can be achieved within the first revolution just by relaxing pro-spin control pressures. From fully developed spins, recovery is achieved by application of normal anti-spin control inputs.

AEROBATICS

It is recommended that the RV-8A be limited to *sport aerobatics*; aerobatic maneuvers done solely for the enjoyment to the pilot rather than of spectators or judges. These maneuvers can be tailored to be gentle to both the airplane and the pilot. The RV-8A can perform all the usual aerobatic maneuvers (see below) easily and gracefully at low g loads. It is rarely necessary to dive to attain entry speeds.

Maneuvering speed is 123 kts; maximum aerobatic weight is 700 kg and maximum aft CG is 217 cm when contemplating aerobatics.

The maneuvering speed is highest speed at which full and abrupt control can be applied without exceeding design loads. This is not highest permissible aerobatic entry speed, but control inputs must be limited to less than full at any speed above maneuvering speed.

The entry speeds for some maneuvers can vary over a wide range due to the large ratio of maximum speed to stall speed. For vertical maneuvers, Loops, Immelmann turns and Cuban eights, entry speed has an inverse relationship to g forces required to complete the maneuver. An entry speed at lower speeds will require a higher G pull up than for entry near top end of speed range.

WARNING: *Airspeed builds up very quickly, particularly in a dive. The RV-8A is a pilot limited aircraft due to the light control - it is the pilot's responsibility not to overstress the aircraft. Control forces vary considerably with CG position - control forces at aft CG are much lighter than stick forces at forward CG.*

Limits: +6G -3G

Flight Regime	**Entry Speed (kts)**
Loop / Cuban 8	122 - 165
Immelmann	130 - 165
Aileron rolls / barrel rolls	104 - 156
Snap rolls	70 - 96
Vertical rolls	156 - 165
Split S	87 - 96

SECTION THREE

CHARTS

I. Performance Charts

TAKEOFF DISTANCE

CONDITIONS:
Flaps 17° (set flap angle to match down aileron angle at full aileron)
2700 RPM, Full Throttle and Mixture Set prior to Brake Release
Paved, Level, Dry Runway
Zero Wind

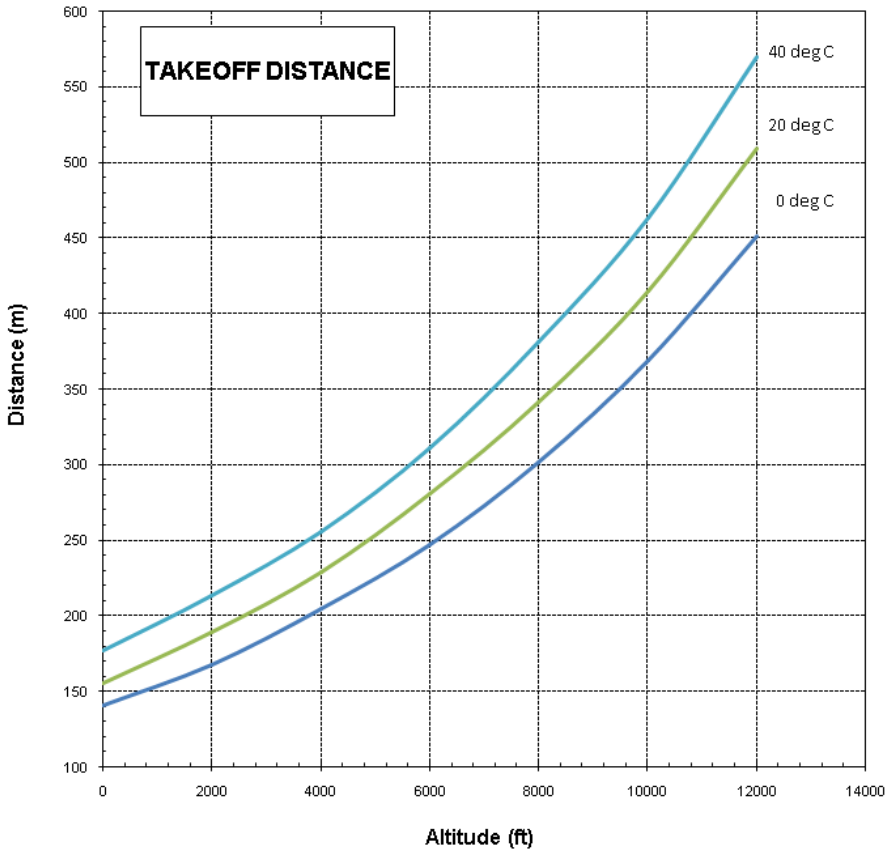

LANDING DISTANCE

CONDITIONS:
Full Flaps
Power OFF
Maximum Braking
Paved, Level, Dry Runway
Zero Wind

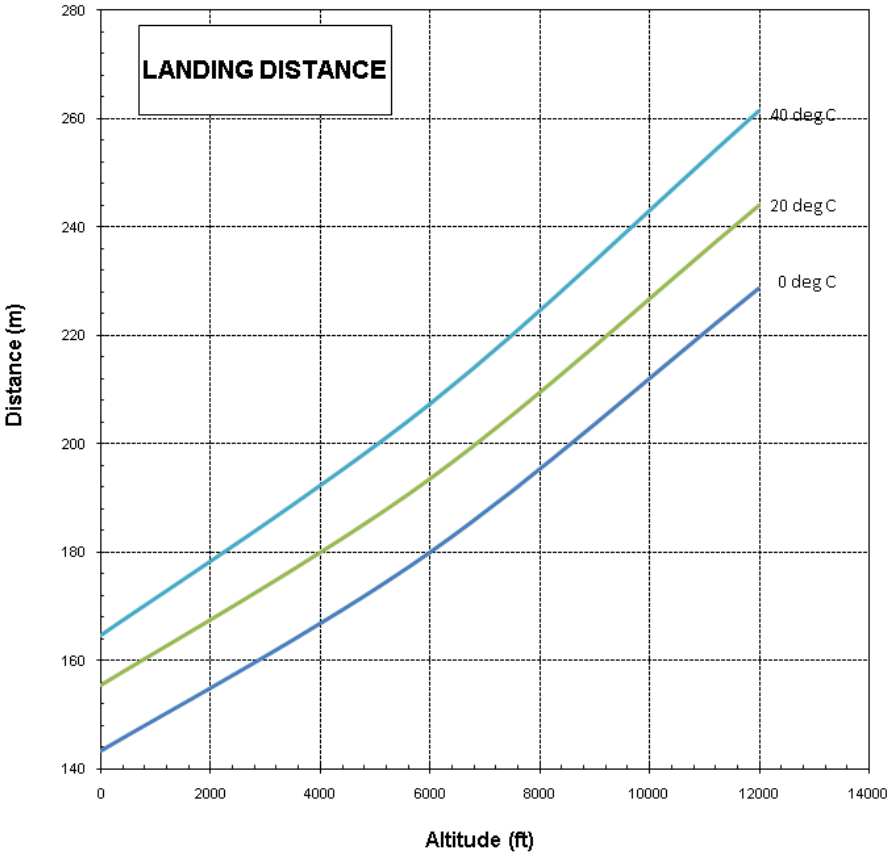

POWER REQUIRED - TAS

CONDITIONS:
Standard atmosphere
Mixture set to best power for 75% power.

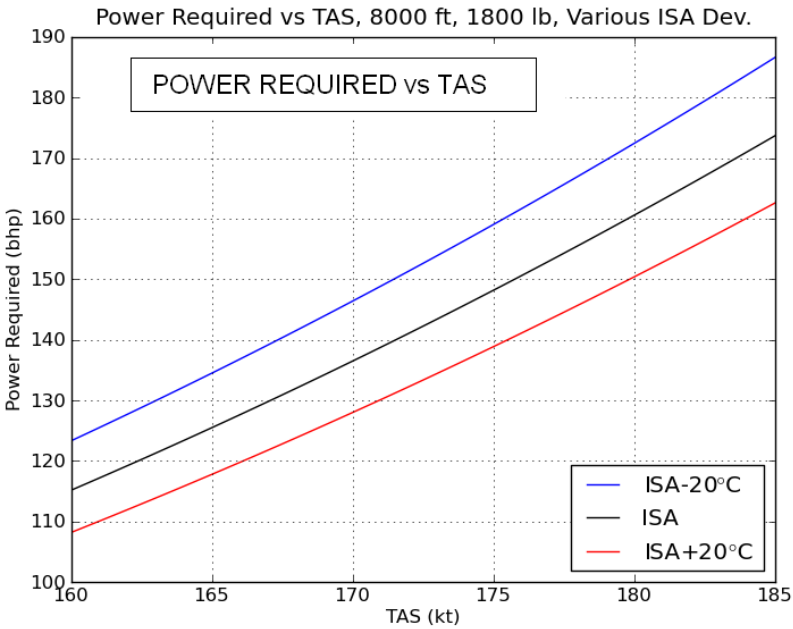

CRUISE SPEED

CONDITIONS:
Standard atmosphere
Mixture set to best power for 75% power.

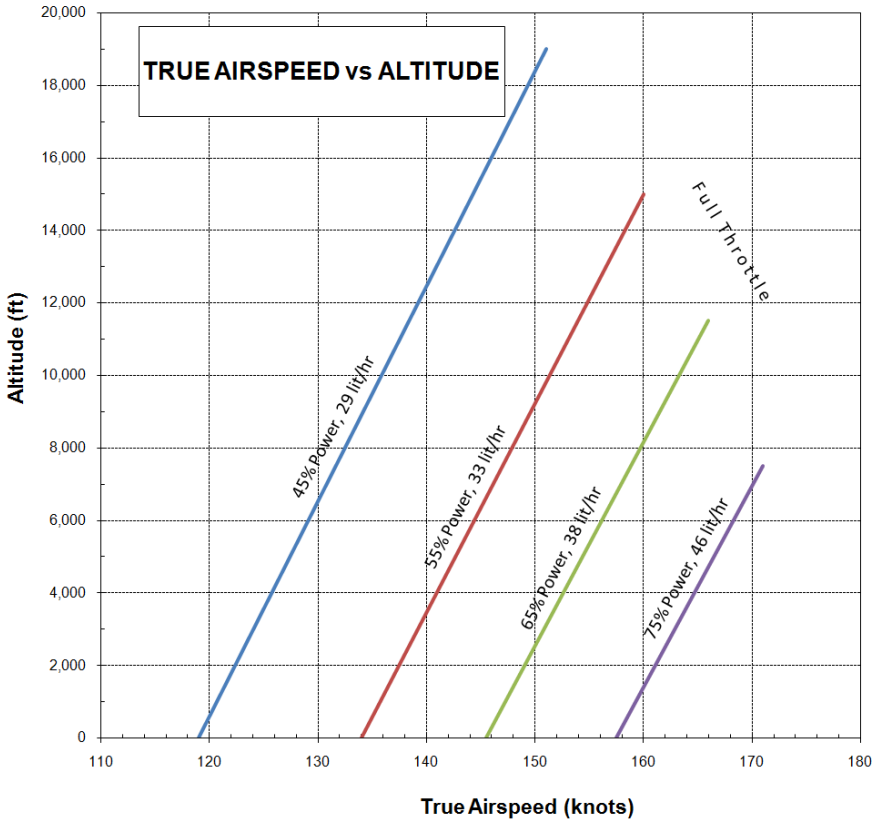

STALL SPEED – GROSS WEIGHT

CONDITIONS:
Idle power
Deceleration 1 kt/s

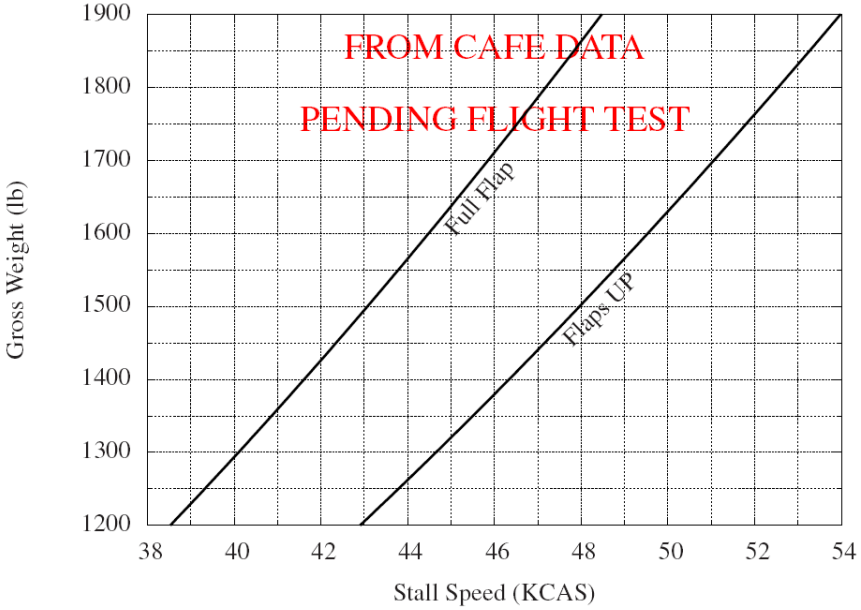

CRUISE RANGE

CONDITIONS:
Standard atmosphere
Mixture leaned

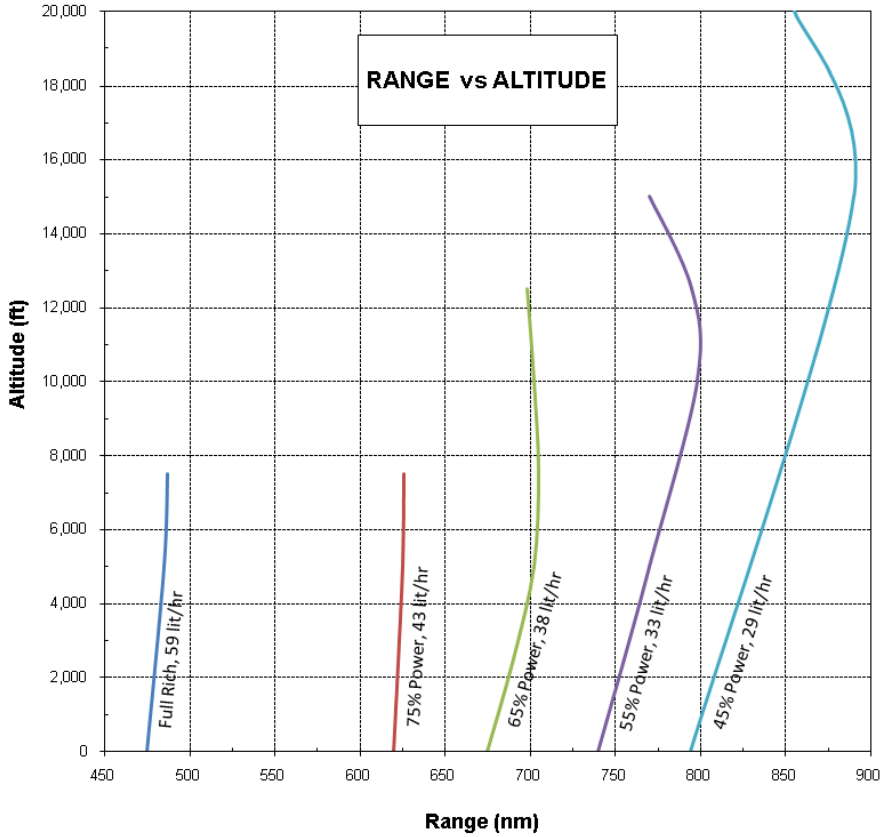

FUEL FLOW

CONDITIONS:
Standard atmosphere

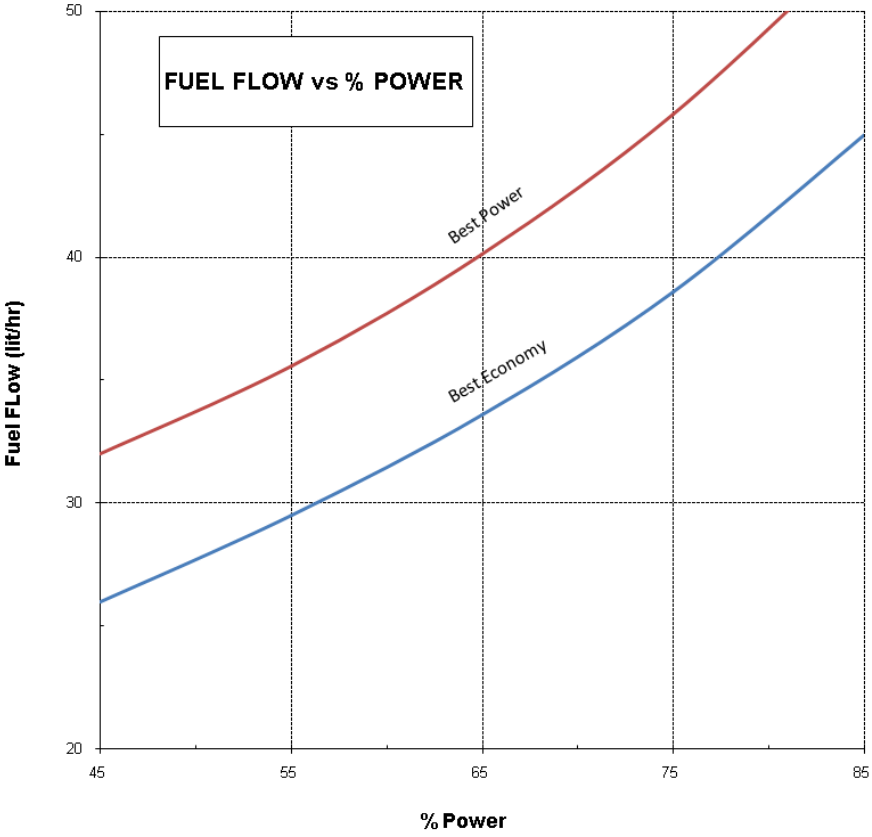

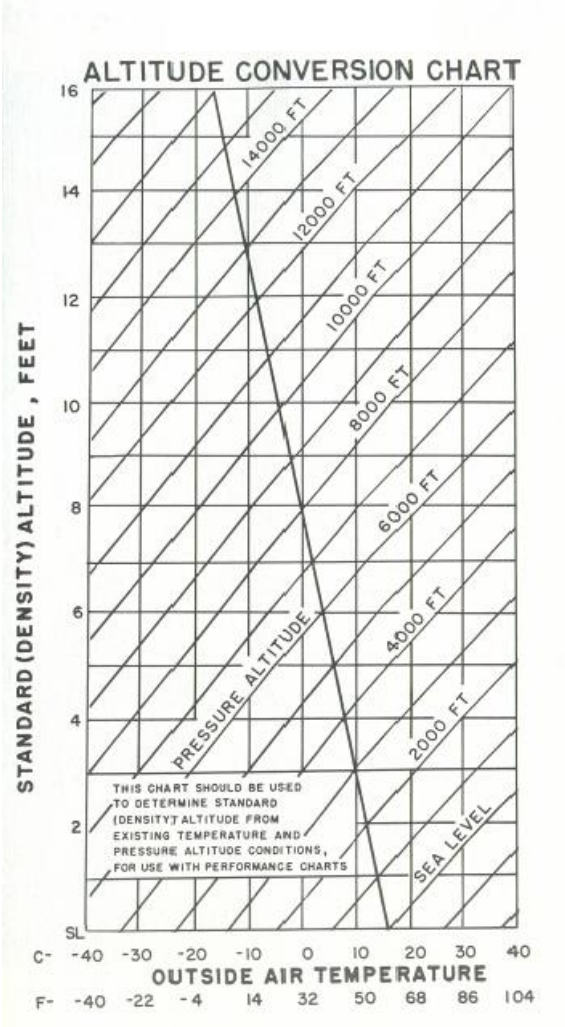
ALTITUDE CONVERSION CHART
STANDARD (DENSITY) ALTITUDE , FEET
16
14
12
10
8
6
4
2
SL
14000 FT
12000 FT
10000 FT
8000 FT
6000 FT
4000 FT
2000 FT
SEA LEVEL
PRESSURE ALTITUDE
THIS CHART SHOULD BE USED TO DETERMINE STANDARD (DENSITY) ALTITUDE FROM EXISTING TEMPERATURE AND PRESSURE ALTITUDE CONDITIONS, FOR USE WITH PERFORMANCE CHARTS
C- -40 -30 -20 -10 0 10 20 30 40
OUTSIDE AIR TEMPERATURE
F- -40 -22 -4 14 32 50 68 86 104

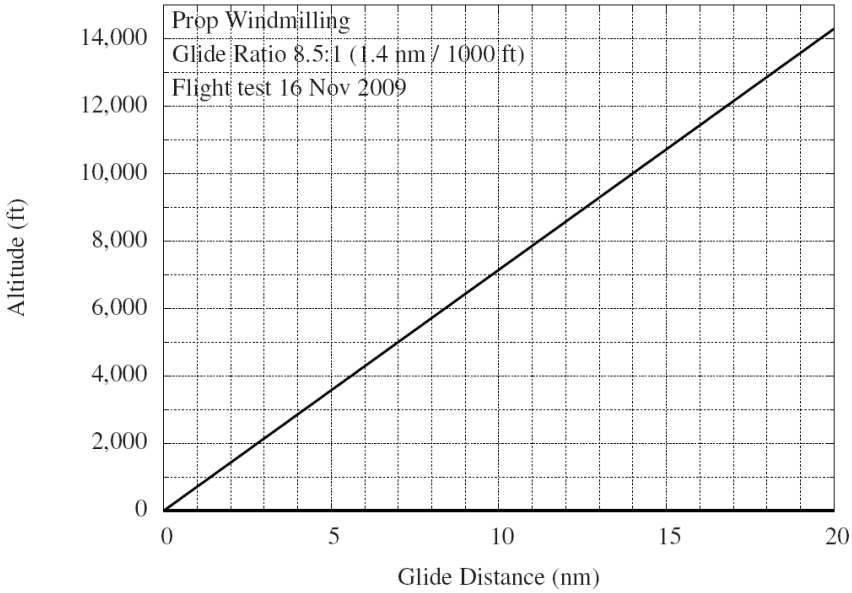
Prop Windmilling
Glide Ratio 8.5:1 (1.4 nm / 1000 ft)
Flight test 16 Nov 2009
Altitude (ft)
14,000
12,000
10,000
8,000
6,000
4,000
2,000
0
0
5
10
15
20
Glide Distance (nm)

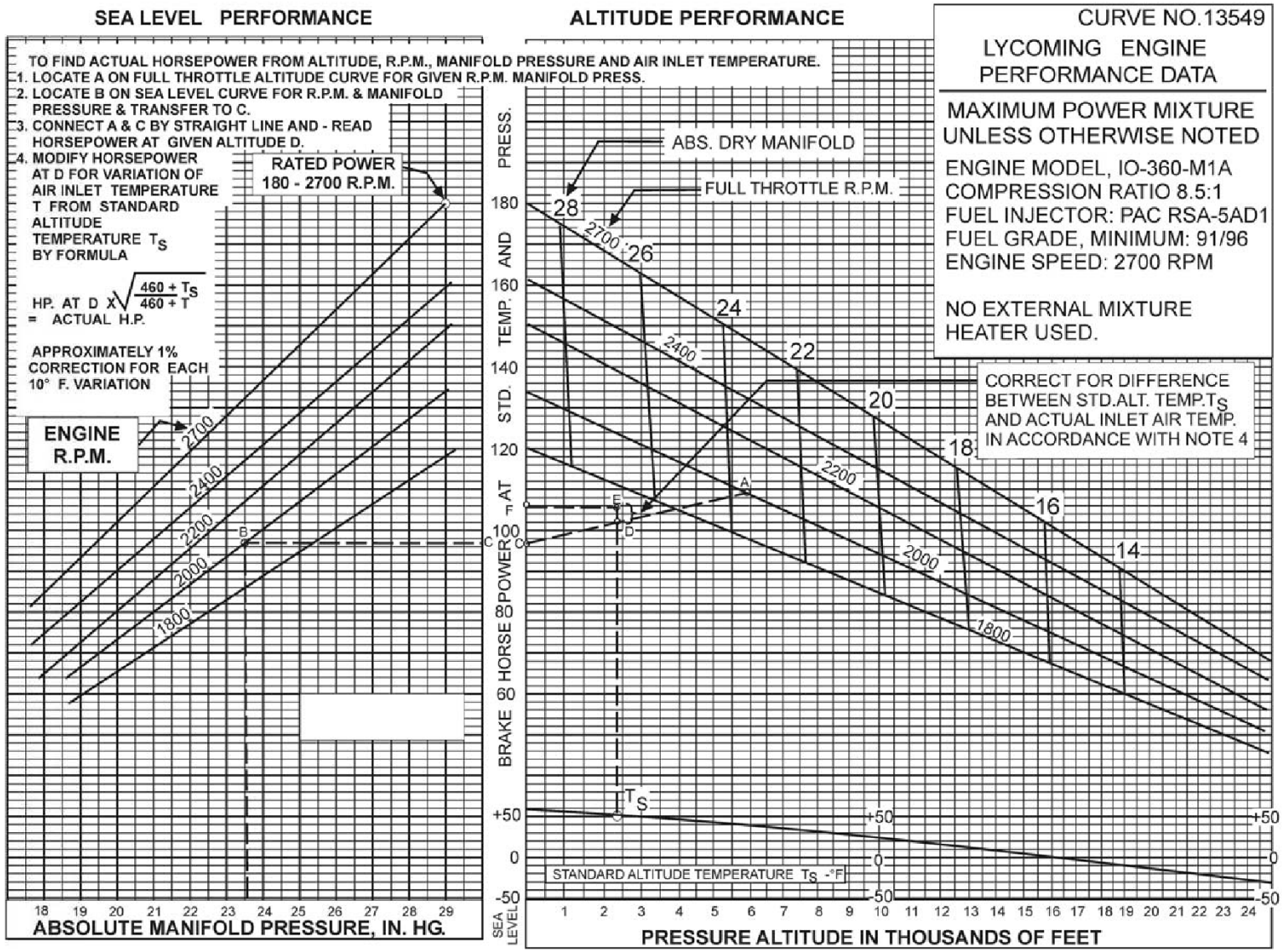

Figure 3-26. Sea Level and Altitude Performance – ▌IO-360-◆, -M1B

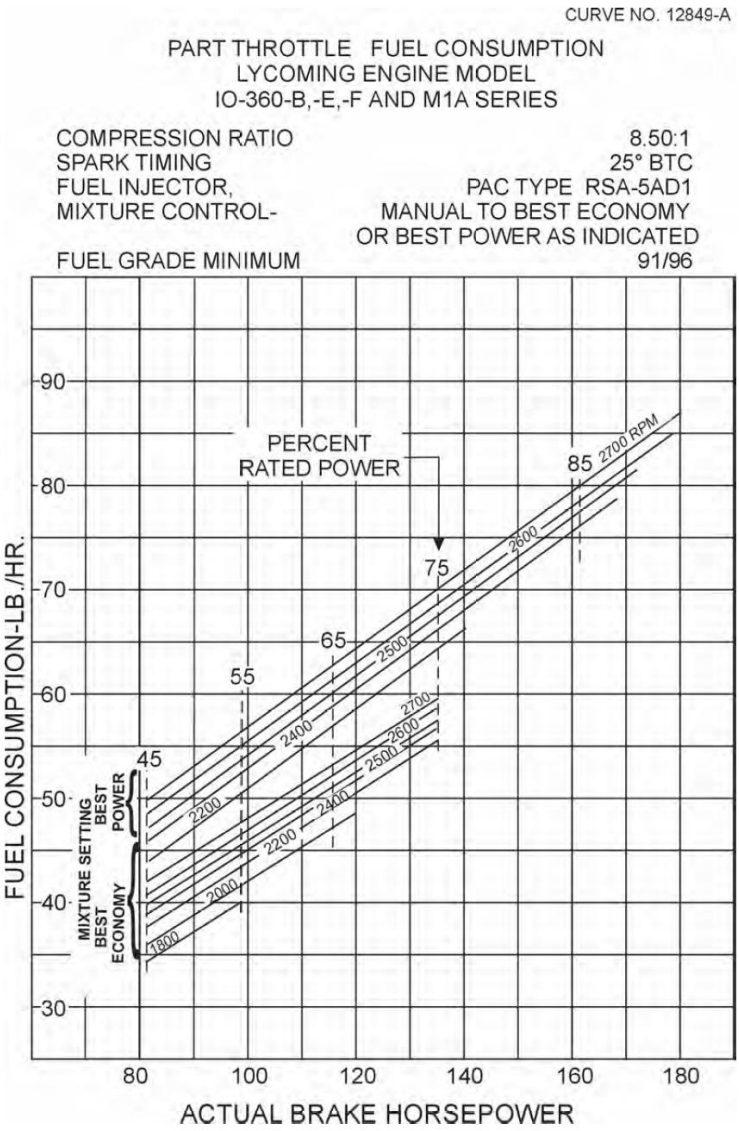

Figure 3-6. Part Throttle Fuel Consumption –
IO-360-B, -E, -F, ♦, -M1B Series (Excepting IO-360-B1A, -B1C); HIO-360-G1A

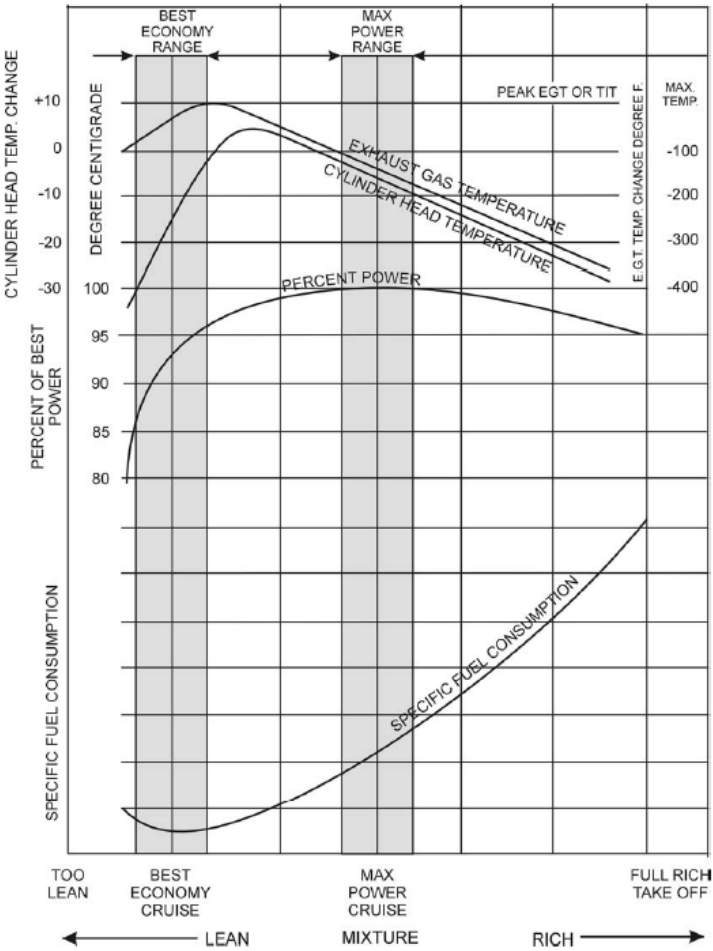
BEST ECONOMY RANGE
MAX POWER RANGE
PEAK EGT OR TIT
MAX. TEMP.
CYLINDER HEAD TEMP. CHANGE
+10
0
-10
-20
-30
DEGREE CENTIGRADE
EXHAUST GAS TEMPERATURE
CYLINDER HEAD TEMPERATURE
E.G.T. TEMP. CHANGE DEGREE F.
-100
-200
-300
-400
PERCENT POWER
PERCENT OF BEST POWER
100
95
90
85
80
SPECIFIC FUEL CONSUMPTION
SPECIFIC FUEL CONSUMPTION
TOO LEAN
BEST ECONOMY CRUISE
MAX POWER CRUISE
FULL RICH TAKE OFF
LEAN
MIXTURE
RICH

SECTION FOUR

GENERAL MAINTENANCE

I. Leveling and Rigging

Leveling the RV-8A for purposes of reweighing or rigging is accomplished as follows:

(1) Put the airplane on jacks to obtain the longitudinally level position.

(3) To level the airplane laterally, place a bubble-protractor on a straight-edge held along the front spar on the under surface of the wing. Raise or lower the wing by pushing up or down on the tip until five degrees of dihedral is indicated on the protractor. The smooth, easy action of the landing gear oleo units makes it possible to position the wing laterally with very little effort. After checking the first wing at 3.5° dihedral, the opposite wing should also be checked to make sure it has equal dihedral.

RIGGING INSTRUCTION:

Although the fixed flight surfaces on the RV-8A obviously cannot be adjusted in position for rigging purposes, it may be necessary on occasion to check the positions of these surfaces. The movable control surfaces, with the exception of the flaps, all have adjustable stops, as well as adjustments on their cables or push-pull connections, so that their range of movement can be altered. The positions and travels of the various surfaces are as follows:

(1) Wings: 3.5° dihedral, washout 0°.

(2) Stabilizer: No dihedral. Incidence is 0° in relation to horizontal.

(3) Fin: Should be vertical and in line with centerline of fuselage.

(4) Ailerons: Travel -30° up, 17° down.

(5) Flaps: Travel -45° down.

(6) Elevator: -30° up and 25° down.

(7) Rudder: Travel -35° left and 35° right.

For the purpose of adjusting the lateral trim on the RV-8A, aileron tabs are incorporated on both ailerons. These tabs can be bent to position the aileron in flight, changing the lateral trim as desired.

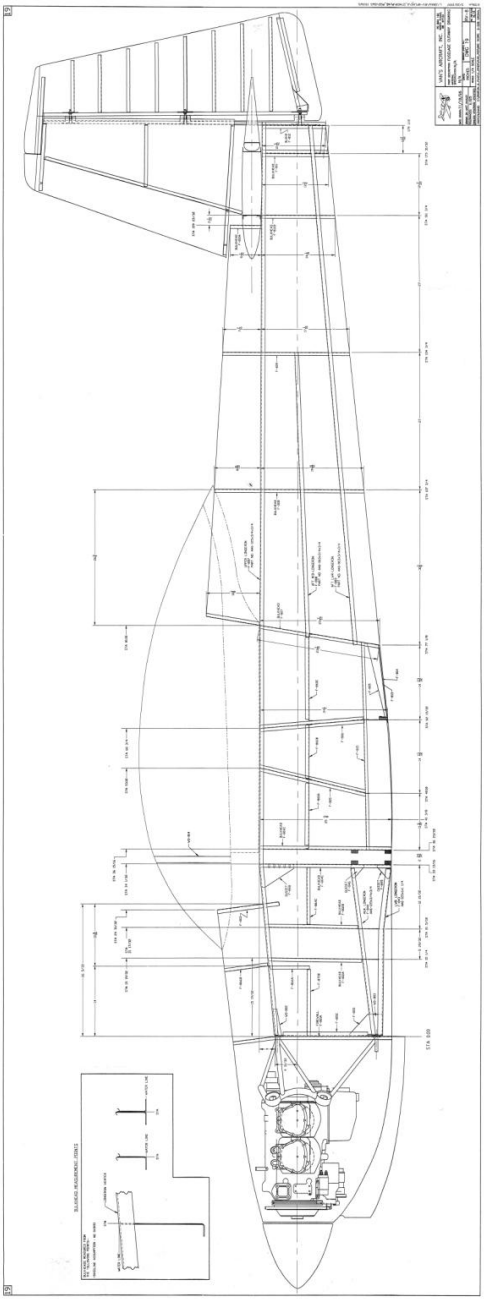

II. Tire Inflation

For maximum service from the tires, keep the RV-8A main wheels inflated to 3 bar and the nose wheel to 2 bar. Reverse the tires on the wheels, if necessary, to produce even wear. All RV-8A wheels and tires are balanced before original installation and the relationship of tire, tube and wheel should be maintained upon reinstallation. Out-of-balance wheels can cause extreme vibration in the landing gear during take-off and landing. In the installation of new components, it may be necessary to rebalance the wheels with the tires mounted.

III. Battery Service

Access to the 12 volt, 18 ampere hour (Odyssey PC625) main battery is obtained by removing the rear baggage panel. The battery is installed on an aluminium and wood tray and secured with a clamp. The battery is of sealed gel type and requires no routine maintenance.

Access to the 12 volt, 8 ampere hour (Odyssey PC310) auxiliary battery is obtained by opening the battery box located in the nose baggage compartment. The battery is installed on an aluminium steel tray and secured with ties. The battery is of sealed gel type and requires no routine maintenance.

If either of the batteries are not up to proper charge, recharge starting with a charging rate of 4 amps and finishing with 2 amps. Quick charges are not recommended.

IV. Brake Service

The brake system is filled with MIL-PRF-5606 (petroleum base red) hydraulic fluid. This should be checked at every 100 hours inspection and replenished when necessary.

Do not use vegetable base brake fluids (blue) when refilling the system. When it is necessary to add fluid, remove the upper engine cowl, exposing the brake reservoir located on the firewall. Then add fluid to the reservoir, bringing the fluid to the indicated level.

If it is necessary to bleed the brake system to get air out of the lines, fluid should be added under pressure at the bleeder attachment on the brake unit.

No adjustment of brake clearances is necessary on the RV-8A brakes. If after extended service, braking action requires too much movement of the toe pedal, new brake linings can easily be installed by removing the four bolts which attach the brake units, then replacing the brake linings held in place by brass rivets.

Main wheels are quickly removed by first cutting the safety wire and removing eight bolts to drop the brake lining. Remove the dust cover, cotter pin and axle nut. The wheel will slip off the axle. The nose wheel is removed by taking off the hub nut and withdrawing the axle bolt, the axle retainer cups and the axle from the nose wheel fork.

Tires are dismounted from the wheels by deflating the tube, then removing the wheel through bolts, allowing the wheel halves

to be separated. In reassembling the wheels, care should be taken to torque the bolts properly, according to instruction on the wheels.

V. Landing Gear Service

In jacking the RV-8A up for landing gear and other service, the Jack Kit (available through the BVH Distributor Service Department) should be used. This kit includes two hydraulic jacks and a tail support; the jacks are placed under <where?> and the tail support attached to the tail skid.

Approximately 100 kg of ballast should be placed on the base of the tail support to hold the tail down. Then the jacks should be raised until all three wheels are clear of the floor.

The right and left landing gear units on the RV-8A are completely interchangeable.

All inside components are identical on both nose and main gears.

The operation of the landing gear is standard for the sprung type; and requires no maintenance apart from checking for cracks.

To check shimmy of the nose wheel, if it should develop:

(1) The nose wheel tire pressure should be between 1.7-2.4 bar (25-35 psi). Lower pressure is preferable because it increases the tire drag, which will help to damp any shimmy. Main tires should also be inflated to between 1.7-2.4 bar.

(2) Ensure that the wheel and tire assemblies are properly balanced.

(3) Check for uneven tire wear.

(4) The nose wheel axle bolt should be torqued to 9.5-13.5 Nm (7-10 pounds).

(5) Check the engine mount and gear leg for any cracks or play. The gear leg attach bolt, at the top of the leg, may be loose allowing movement of the leg in the mount socket.

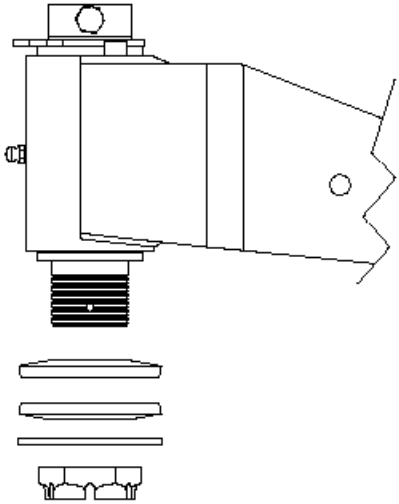

(6) The nose fork disc springs should be clean and mounted correctly (SEE ABOVE)

(7) Breakout force should be set at 100 N (22 lb force) (SEE DWG C-1).

The nose gear unit is dismounted by removing the nose wheel cowling and the leg fairing covering the top of the nose gear and extracting the landing gear bolt.

Removal of the landing gear wheels is done as follows:

(1) Remove the split pin from the castellated nut on the axle and then remove the nut

(2) Pull out the axle and remove the wheel from the fork. Care should be taken not to drop the wheel bearings.

(3) Remove the upper bearing retainer pins and slide both upper and lower bearings from the strut. The O-rings and wiper strips are then exposed for inspection.

To refit the landing gear wheel, reverse the above procedure, being very careful to see that the snap ring and the upper bearing retainer pins are properly reinstalled.

In the event that a wheel slowly loses pressure, the most probable source of trouble is a wheel puncture or faulty air valve. These parts should be checked first to determine whether or not air leaks are occurring. In the case of a puncture, it is recommended that the inner tube be replaced.

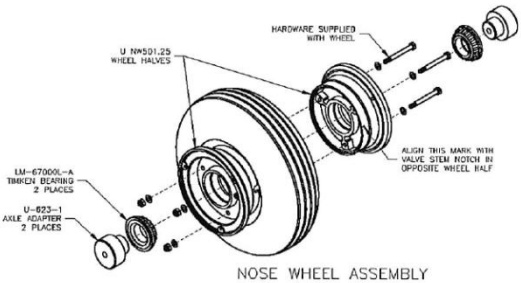

NOSE WHEEL ASSEMBLY
EXPLODED ISOMETRIC VIEW
NO SCALE

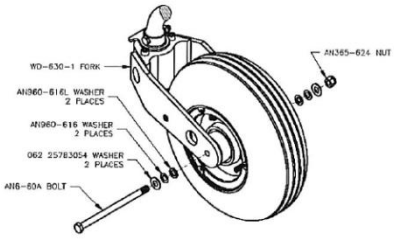

NOSE WHEEL ATTACHMENT HARDWARE
EXPLODED ISOMETRIC VIEW
NO SCALE

VI. Hydraulic System Service

The hydraulic system is filled by adding fluid to the reservoir, located on the firewall. Only petroleum base hydraulic fluid, MIL-PRF-5606, should be used.

To add fluid to the system, remove the cap from the filler neck and fill the system completely while holding the filler tube extension level. Then turn the elbow on the filler tube down until the excess oil has drained out. (See separate instructions for filling, cleaning and bleeding the complete hydraulic system).

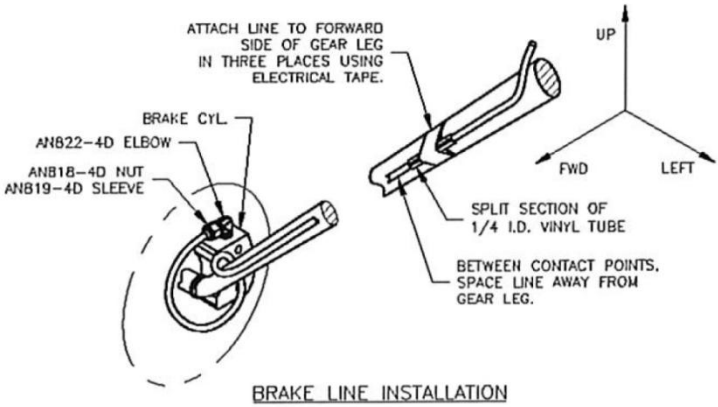

BRAKE LINE INSTALLATION

VII. Fuel Requirements

Aviation grade 100LL octane should be used in the RV-8A. The use of lower grades of fuel can cause serious engine damage in a very short period of time and is considered of such importance that the engine warranty is invalidated by such use.

The oil capacity of the Lycoming IO-360 engine is 8 liters. It is recommended that engine oil be changed every 50 flying hours or sooner under unfavorable conditions. The minimum safe quantity of oil required is 4 liters. The following grades are required for the specified temperatures:

Temperatures above 15 °C	SAE 50
Temperatures between 0 °C and 30 °C	SAE 40
Temperatures between -30 °C and 20 °C	SAE 30
Temperatures below 30 °C	SAE 20

VIII. Care of Air Filter

The throttle body air filters must be cleaned at least once every fifty hours and depending on the type of condition existing, it may be necessary to clean the filters daily or every five hours. Extra filters are inexpensive and should be kept on hand and used for rapid replacement.

The following cleaning procedure is recommended by the manufacturer of the filter:

(1) Remove filter, inspect and clean by tapping it against a hard surface to remove grit, sand and dirt. (Do not blow out with an air hose, soak in oil, or cleaning fluid).

(2) If the filter is found to be in good condition and is not obstructed after being properly cleaned, reinstall filter.

IX. Care of Windshield and Canopy

The windshield and canopy are made of Plexiglas and a certain amount of care is required to keep them clean and clear. The following procedure is suggested:

(1) Flush with clean water and dislodge excess dirt, mud, etc. with your hand.

(2) Wash with mild soap and warm water. Use a soft cloth or sponge. (Do not rub)

(3) Remove oil, grease or sealing compounds with a cloth soaked in kerosene.

CAUTION - Do not use gasoline, alcohol, benzene, carbon tetrachloride, lacquer thinner or window cleaning sprays.

(4) After cleaning, apply a thin coat of hard polishing wax. Rub lightly with a soft dry cloth.

(5) A severe scratch or mar can be removed by using jewelers rouge to rub out scratch, smooth on both sides and apply wax.

X. Serial Number Plate

The serial number plate on the RV-8A is located against the aft baggage compartment wall below the hat rack. The serial number of the plane should always be used in referring to the airplane in service or warranty matters.

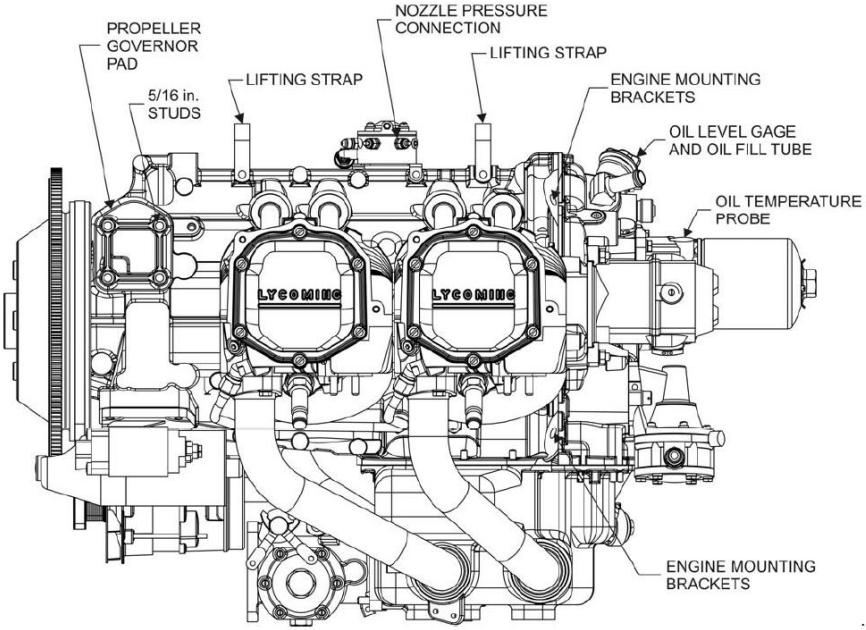
PROPELLER GOVERNOR PAD
5/16 in. STUDS
LIFTING STRAP
NOZZLE PRESSURE CONNECTION
LIFTING STRAP
ENGINE MOUNTING BRACKETS
OIL LEVEL GAGE AND OIL FILL TUBE
OIL TEMPERATURE PROBE
LYCOMING
LYCOMING
ENGINE MOUNTING BRACKETS

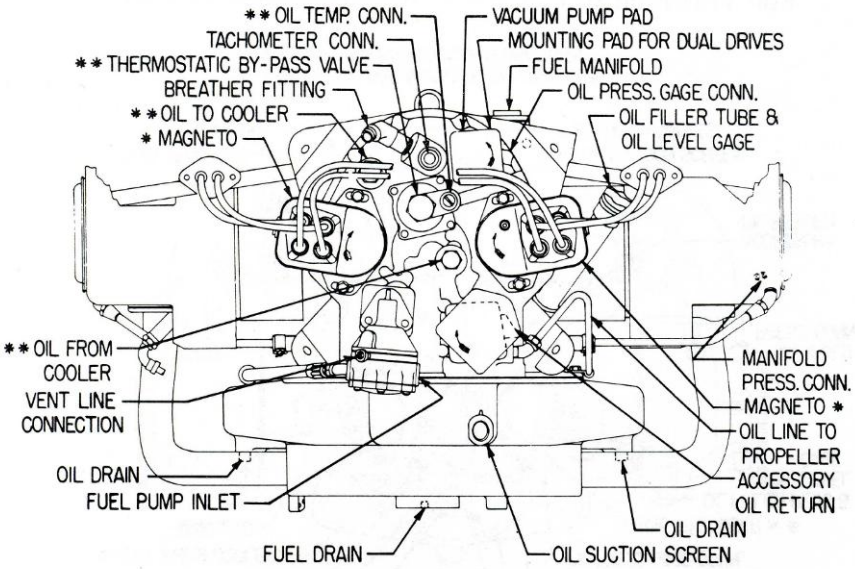
** OIL TEMP. CONN.
TACHOMETER CONN.
** THERMOSTATIC BY-PASS VALVE
BREATHER FITTING
** OIL TO COOLER
* MAGNETO
VACUUM PUMP PAD
MOUNTING PAD FOR DUAL DRIVES
FUEL MANIFOLD
OIL PRESS. GAGE CONN.
OIL FILLER TUBE & OIL LEVEL GAGE
** OIL FROM COOLER
VENT LINE CONNECTION
OIL DRAIN
FUEL PUMP INLET
FUEL DRAIN
MANIFOLD PRESS. CONN.
MAGNETO *
OIL LINE TO PROPELLER
ACCESSORY OIL RETURN
OIL DRAIN
OIL SUCTION SCREEN

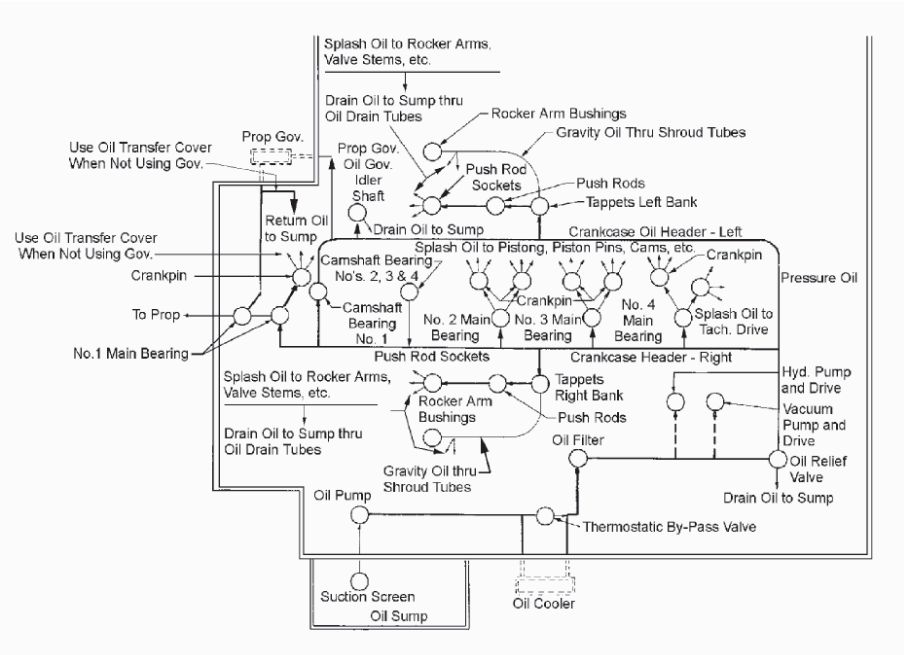

Figure 1-1. Oil System Schematic Diagram

GARMIN G3X EFIS ARCHITECTURE

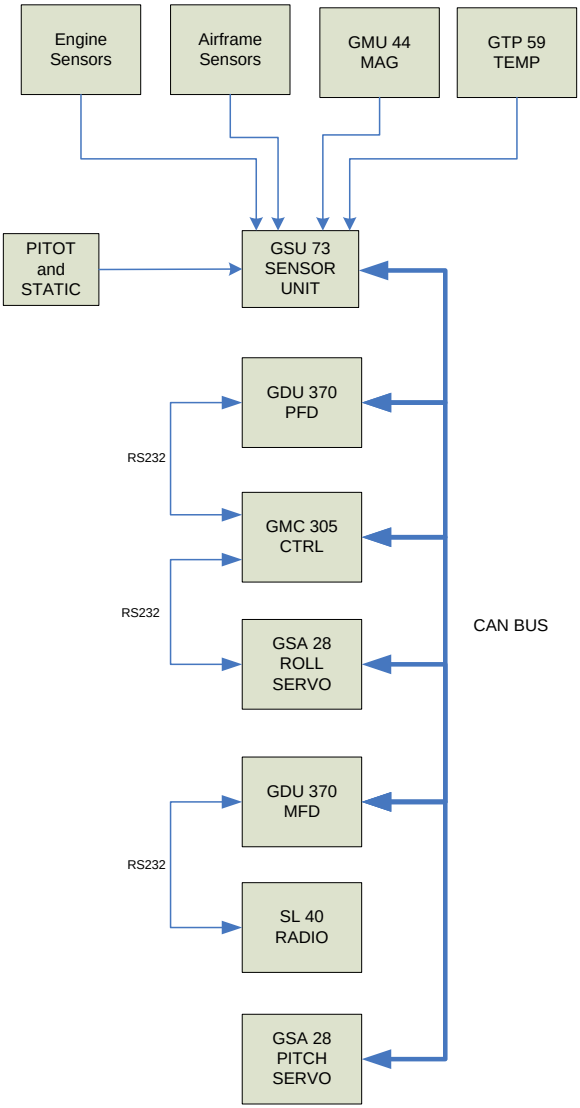

SECTION FIVE

WEIGHT AND BALANCE DATA

I. Loading Sheet

Make:	Vans
Model:	RV-8A
Serial Number:	82612

Datum: 178 cm forward of the wing leading edge (LE)

Design CG Range:	15% to 29% of wing cord (200 to 221 cm aft of Datum)
Wing LE:	178 cm aft of Datum
Main wheel right:	237 cm aft of Datum
Main wheel left:	237 cm aft of Datum
Nose Wheel:	82 cm aft of Datum
Fuel	203 cm aft of Datum
Pilot:	233 cm aft of Datum
Passenger:	303 cm aft of Datum
Forward Baggage:	149 cm aft of Datum
Aft Baggage Floor:	351 cm aft of Datum
Aft Baggage Shelf:	388 cm aft of Datum

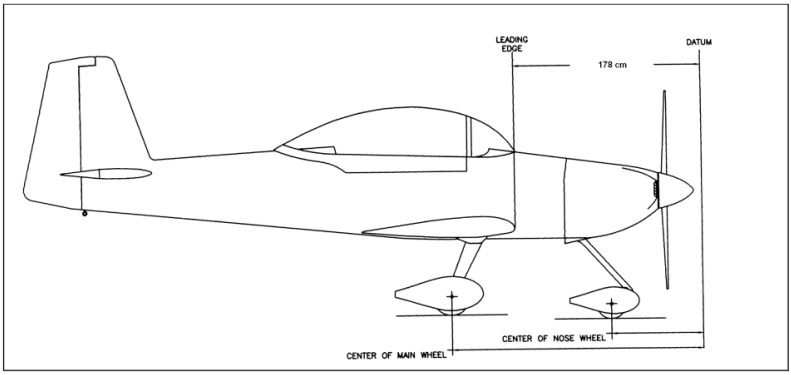

Aircraft weighed empty in level attitude. (Includes 8 lit of oil plus unusable fuel)

	Weight (kg)	Arm (cm)	Moment
Right Wheel	189.8	236.8	45181
Left Wheel	186.6	236.8	44423
Nose Wheel	134.9	82.3	11102
Total: 511.3 kg			
Empty CG: 196.0 cm			

II. W&B Envelope

Datum: 178 cm forward of the wing leading edge (LE)

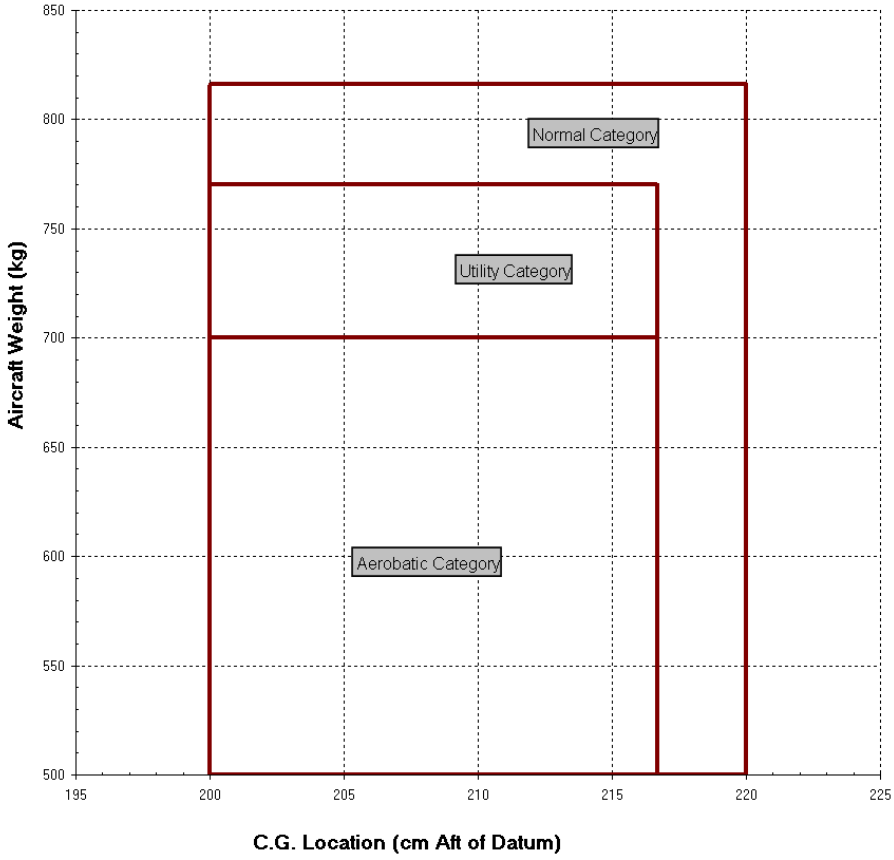

Category	**Description**	**Maneuver**	**Load factors**
Normal	Non aerobatic	Stall Steep turn of 60deg	+3.8g and -1.0g
Utility	Limited aerobatics	Wingover / Lazy-8 Chandelle Spin	+4.5g and -1.8g
Acrobatic	Fully aerobatic	Loop / Cuban-8 Immelmann Aileron roll / Barrel roll Snap roll Vertical roll Split-S	+6.0g and -3.0g

III. Load Factor Limits

Flaps Retracted
weight 700 kg (1550 lb) and below: +6g to -3g
reducing linearly to 820 kg (1800 lb): +5g to -2.5g

Flaps Extended: +2g to 0g

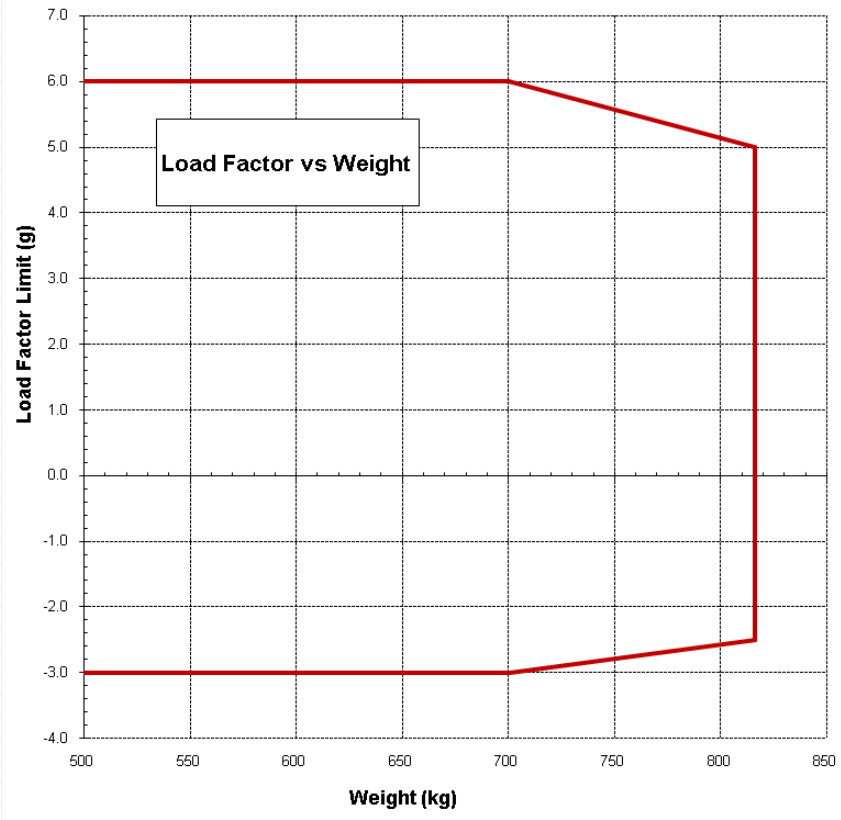

The load factor limit varies linearly between 820 kg and 700 kg.

NOTES:

1. The load factor limits for weights above 703 kg (1550 lb) are not published by Van's Aircraft, but are established based on conservative engineering analysis of wing bending moment vs load factor.

2. The load factor limits for flaps extended are based on FAR 23 structural design criteria, which the RV-8A aircraft is designed to.

IV. Flight Envelope

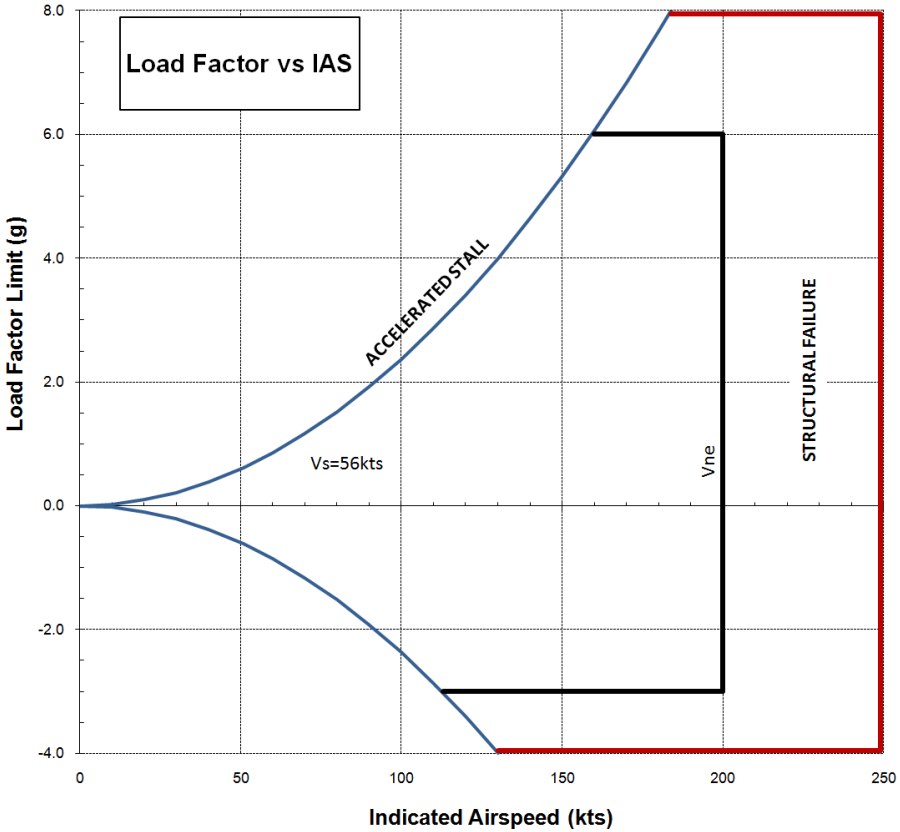

V. Worked Examples

Aerobatic loading - Solo

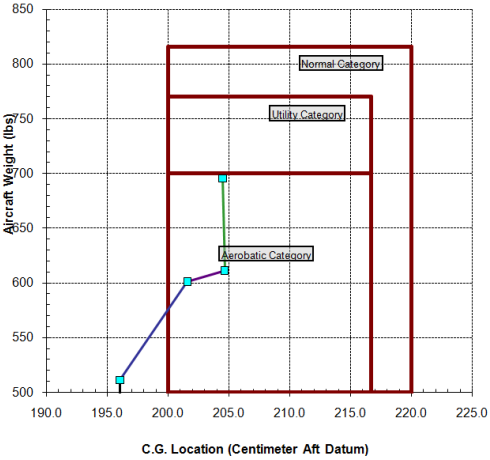

RV-8A - VH-ZSW

	Qty	kg Weight	cm Arm	Moment
Basic Empty Weight	511 kg	511.3	196.0	100,234
Pilot	90 kg	90	233.1	20,979
Pax	0 kg	0	302.6	0
Nose Baggage (25 kg Max)	0 kg	0	148.6	0
Aft Baggage (25 kg Max)	0 kg	0	350.5	0
Aft Hat Shelf (10 kg Max)	10 kg	10	388.4	3,884
Fuel Lit. (160 Lit Max)	120 lit	84	203.2	17,069
Total (M.G.W.=818 kg)		695.3	204.5	142,166

Note: Max Landing Wt 816 kg

Aerobatic loading - Dual

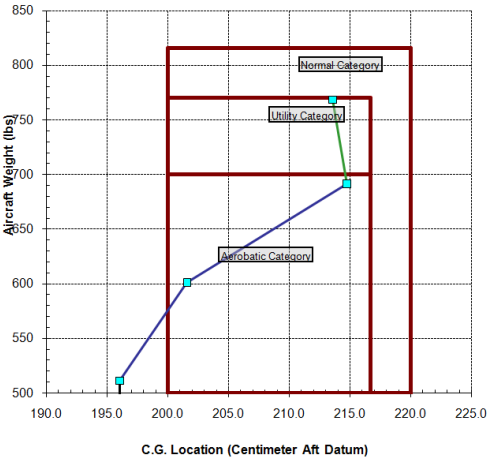

RV-8A - VH-ZSW

	Qty	kg Weight	cm Arm	Moment
Basic Empty Weight	511 kg	511.3	196.0	100,234
Pilot	90 kg	90	233.1	20,979
Pax	90 kg	90	302.6	27,234
Nose Baggage (25 kg Max)	0 kg	0	148.6	0
Aft Baggage (25 kg Max)	0 kg	0	350.5	0
Aft Hat Shelf (10 kg Max)	0 kg	0	388.4	0
Fuel Lit. (160 Lit Max)	110 lit	77	203.2	15,646
Total (M.G.W.=818 kg)		768.3	213.6	164,093

Note: Max Landing Wt 816 kg

Cross country loading - Payload

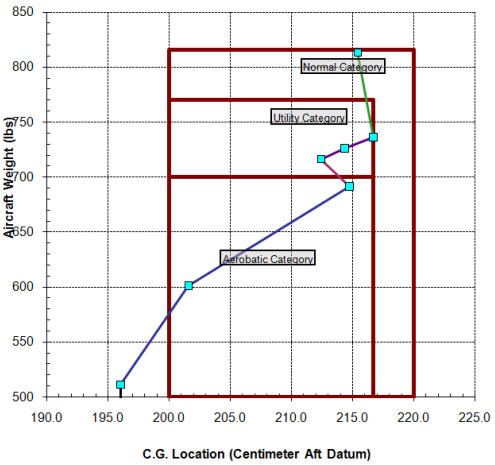

RV-8A - VH-ZSW

	Qty	kg Weight	cm Arm	Moment
Basic Empty Weight	511 kg	511.3	196.0	100,234
Pilot	90 kg	90	233.1	20,979
Pax	90 kg	90	302.6	27,234
Nose Baggage (25 kg Max)	25 kg	25	148.6	3,715
Aft Baggage (25 kg Max)	10 kg	10	350.5	3,505
Aft Hat Shelf (10 kg Max)	10 kg	10	388.4	3,884
Fuel Lit. (160 Lit Max)	110 lit	77	203.2	15,646
Total (M.G.W.=818 kg)		813.3	215.4	175,197

Note: Max Landing Wt
816 kg

Cross country loading - Range

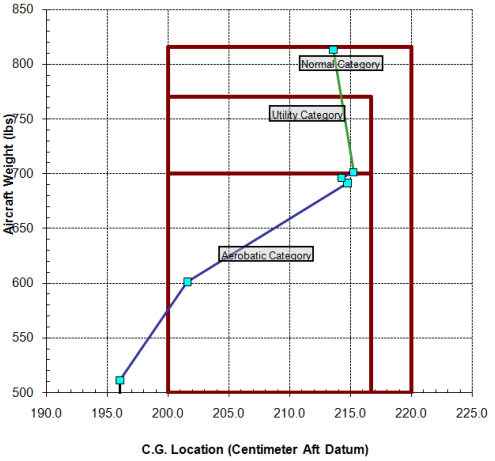

RV-8A - VH-ZSW

	Qty	kg Weight	cm Arm	Moment
Basic Empty Weight	511 kg	511.3	196.0	100,234
Pilot	90 kg	90	233.1	20,979
Pax	90 kg	90	302.6	27,234
Nose Baggage (25 kg Max)	5 kg	5	148.6	743
Aft Baggage (25 kg Max)	5 kg	5	350.5	1,753
Aft Hat Shelf (10 kg Max)	0 kg	0	388.4	0
Fuel Lit. (160 Lit Max)	160 lit	112	203.2	22,758
Total (M.G.W.=818 kg)		813.3	213.8	173,701

Note: Max Landing Wt
816 kg

CHECKLISTS

BEFORE STARTING ENGINES

- Ballast..... CHECK
  (10kg aft for solo)
  (removed for dual)
- Baggage ..... SECURE
- Mass & balance ..... CHECK
- Performance ..... CHECK
- Documentation ..... CHECK
- Maps & charts ..... CHECK
- Cabin door ..... LOCKED
- Seat belts ..... SECURE
- Seats ..... LOCKED and SECURE
- Park brake ..... ON
- Altimeter ..... SET
- Controls ..... FREE
- Fuel ..... ON
- Circuit breakers ..... CHECK
- Avionics ..... OFF

STARTING ENGINES - COLD

- Master ..... ON
- Magnetos ..... ON
- Cowl flaps ..... SET
- Throttle ..... FULL OPEN
- Pitch ..... FULL FINE
- Mixture ..... FULL RICH
- Fuel pump ..... ON
  (until flow indication)
- Mixture ..... IDLE CUT-OFF
- Fuel pump ..... OFF
- Throttle ..... 1/4 OPEN
- Propeller ..... CLEAR
- Starter ..... ENGAGE
- Mixture ..... ADVANCE
- Oil pressure ..... CHECK

STARTING ENGINES - HOT

- Master ..... ON
- Magnetos ..... ON
- Cowl flaps ..... SET
- Throttle ..... 1/4 OPEN
- Pitch ..... FULL FINE
- Mixture ..... IDLE CUT-OFF
- Propeller ..... CLEAR
- Starter ..... ENGAGE
- Mixture ..... ADVANCE
- Oil pressure ..... CHECK

STARTING ENGINES - FLOODED

- Master ..... ON
- Magnetos ..... ON
- Cowl flaps ..... SET
- Throttle ..... FULL OPEN
- Pitch ..... FULL FINE
- Mixture ..... IDLE CUT-OFF
- Fuel pump ..... OFF
- Propeller ..... CLEAR
- Starter ..... ENGAGE
- Throttle ..... RETARD
- Mixture ..... ADVANCE
- Oil pressure ..... CHECK

TAXI

- Radio ..... SET
- Park brake ..... OFF
- Brakes ..... TEST
- Lights ..... AS REQUIRED
- Flight Instruments ..... CHECK

PRE TAKEOFF

- Park brake ..... ON
- Fuel ..... CHECK
- Hatches and Harnesses .... SECURE
- Engine - RUN-UP
  a) Mixture ..... RICHEN
  b) Pitch ..... FULL FINE
  c) Throttle ..... 2200 RPM
  d) Magneto..... CHECK
  (drop 175 diff 50 RPM)
  e) Pitch ..... EXERCISE
  f) Instruments ..... GREEN
- Trim ..... SET
- Test ..... Controls
- Magnetos ..... BOTH
- Fuel pump ..... ON
- Flaps ..... RETRACTED
- Gear ..... CHECK
- Instruments ..... CHECK
- Attitude Indicator ..... SET
- Altimeter ..... SET
- Autopilot ..... OFF

Engine failure after takeoff briefing:

Speed – 105 kts (85 kts for full flap)
Field – 30 degree of nose
Fault – Fuel-Air-Mags-Engine
Flap – As required
Final – Fuel off, Mayday call

TAKEOFF

- Transponder and Radar ..... ON
- Power ..... FULL POWER
- Rotate 65 kts .....(Vr)
- Accelerate to 70 kts .....(Vx)
- Positive ROC ..... Toe brakes
- Undercarriage ..... RETRACT
- Accelerate to 90 kts .....(Vy)
- Power ..... CLIMB POWER
  a) Throttle - 25"
  b) Pitch - 2500 RPM
  c) Mixture - 20 GPH
- Fuel pump ..... OFF

AIRFIELD JOINING

- **F**uel ..... SELECT
- **R**adio's ..... SET
- **E**ngine ..... SET
- **D**I ..... ALIGN
- **A**ltimeter ..... SET
- **A**pproach ..... REVIEW
- **S**ecurity ..... Harnesses SECURE
- **S**peeds ..... REVIEW

CIRCUIT

- **B**rakes ..... ON and OFF
- **U**ndercarriage ... DOWN and LOCKED
- **M**ixture ..... SET
- **P**itch ..... SET
- **T**hrottle ..... 18"
- **F**uel pumps ..... ON
- **F**laps ..... SET
  a) 1/4 Flap 90 kts
  b) 1/2 Flap 85 kts
  c) Full Flap 85 kts

FINAL APPROACH

- **P**itch ..... FULL FINE
- **U**ndercarriage ... DOWN and WELDED
- **F**laps ..... FULL

POST LANDING

- Flaps.. IDENTIFY LEVER and RETRACT
- Fuel pump ..... OFF

PARKING

- Electrics ..... OFF
- Magneto's ..... CHECK DEAD CUT
- Mixture ..... IDLE CUTOFF
- Magneto's ..... OFF
- Master ..... OFF
- Fuel ..... OFF